ELECTRICAL MACHINES AND APPLIANCES

PRACTICAL - I & II

VOCATIONAL EDUCATION

HIGHER SECONDARY SECOND YEAR

A publication under
Government of Tamilnadu
Distribution of Free Textbook Programme
(NOT FOR SALE)

Untouchability is a sin
Untouchability is a crime
Untouchability is inhuman

TAMILNADU
TEXTBOOK CORPORATION
COLLEGE ROAD, CHENNAI - 600 006.

© Government of Tamilnadu
First Edition - 2011

CHAIR PERSON

Dr. **J. KANAGARAJ,**
Associat Professor,
Electrical and Electronics Department,
P.S.G. Engineering College,
Peelamedu, Coimbatore

AUTHORS

Mrs. A. SUMATHI,
Associat Professor,
Electrical and Electronics Department,
P.S.G. Engineering College,
Peelamedu, Coimbatore

Mr. R. KRISHNAKUMAR,
Assistant Professor,
Electrical and Electronics Department,
P.S.G. Engineering College,
Peelamedu, Coimbatore

Mr. B. BALASUBRAMANIAN
Vocational Instructor (Special Grade)
Municipal Boys Higher Secondary School,
Pollachi,
Kovai District.

Mr. K.S. SAMBATH NAGARAJAN,
Vocational Instructor (Special Grade)
Govt. Higher Secondary School,
Paravakkottai,
Thiruvarur District.

This book has been prepared by The Directorate of School Education on behalf of the Government of Tamilnadu

This Book has been Printed on 60 G.S.M Paper

PRACTICAL - I

Syllabus

Ex. No.	
1	Wind the single phase 230V / 12V-0-12V, 3A shell type transformer and check the continuity and operation with out vibration. Measure the rated voltage and rated current on full load in secondary winding.
2	Wind the 230V, 750W, 2 Pole universal motor new field windingand insulate the proper area. Insert the field winding and connect the end connections and test the function.
3	Prepare the running coils by concentric method for AC, 230V, 24 Slots, 4 Poles capacitor start inductionrun motor. Insert the running coils in stator slots and connect the end connections. Conduct the earth test and continuity test.
4	Prepare the starting coils by concentric method for AC, 230V, 24 Slots, 4 Poles capcitaor start inductionrun motor. Insert the starting coils in stator slots and connect the end connections. Conduct the earth test and continuity test.
5	Prepare the running coils by concentric method for AC, 230V, 36 slots, 4 Poles capcitor start inductionrun motor. Insert the running coils in stator slots and connect the end connections. Conduct the earth test and continuity test.
6	Prepare the starting coils by concentric method for AC, 230V, 36 Slots, 4 Poles capacitor start induction run motor, insert the starting coils in stator slots and connect the end connections. Conduct the earth test and continuity test.
7	Rewind the main winding of AC, 230V, Salient pole type shaded pole motor and test it.
8	Rewind the ceiling fan of AC single phase, 230V
9	Wind the one phase coils for AC three phase 400/440V, 24 slots, 4 Poles stator of squirrel cage induction motor in double layer diamond coil method.
10	Insert the already wound one phase coils for AC, 3 phase, 400/440V, 24 slots, 4 Poles stator of squirrel cage induction motor in double layer method. Connect the end connections and conduct the earth test and continuity test.
11	Wind the one phase coils for AC three phase 400/440V, 36 slots, 4 Poles stator of squirrel cage induction motor in Single layer method.
12	Insert the already wound one phase coils for AC, 3 phase, 400/440V, 36 slots, 4 Poles stator of squirrel cage induction motor in single layer method. Connect the end connections and conduct the earth test and continuity test.
13	Rewind the given DC armature in simplex lap winding. Conduct the erth test, short circuit test, continuity test and commutator segment bars short circuit test.
14	Rewind the given DC armature in simplex wave winding. Conduct the erth test, short circuit test, continuity test and commutator segment bars short circuit test.
15	Dismantle the given AC, 3 phase 400/440V squirrel cage induction motor by proper tools. Check the insulationresistance by using megger. Check the bearing and apply the quality grease in correct quantity. Assemble the motor and measure the air gap by feeler gauge.

PRACTICAL - II

Ex. No.	Syllabus
1	Dismantle the given faulty steam ironbox,identifythe fault and correct it and re assemble the iron box and test the iornbox.
2	Dismantle the given faulty automatic ironbox,identify the fault and correct it and re assemble the iron box and test the iornbox.
3	Dismantle the given faulty Electric Stove, identifythe fault and correct it and re assemble the Electric Stove and test the Electric Stove.
4	Dismantle the given faulty Hot Plate, identify the fault and correct it and re assemble the Hot Plate and test the Hot Plate.
5	Dismantle the given faulty Electrict Bread Toaster, identify the fault and correct it and re assemble the Electrict Bread Toaster and test the Electrict Bread Toaster.
6	Dismantle the given faulty Saucer pan kettle, identify the fault and correct it and re assemble the Saucer pan kettle and test the Saucer pan kettle.
7	Dismantle the given faulty Geyser, identifythe fault and correct it and re assemble the Geyser and test the Geyser.
8	Dismantle the given faulty Coffee Perculator, identify the fault and correct it and re assemble the Coffee Perculator and test the Coffee Perculator.
9	Dismantle the given faulty Mixer, identify the fault and correct it and re assemble the Mixer and test the Mixer.
10	Dismantle the given faulty Egg beater, identify the fault and correct it and re assemble the Egg beater and test the Egg beater.
11	Dismantle the given faulty Table Fan, identify the fault and correct it and re assemble the Table Fan and test the Table Fan.
12	Dismantle the given faulty CilingFan, identify the fault and correct it and re assemble the Ciling Fan and test the Ciling Fan.
13	Dismantle the given faulty Domestic Water Pumpset, identify the fault and correct it and re assemble the Domestic Water Pumpset and test the Domestic Water Pumpset.
14	Dismantle the given faulty Electric Hair Drier, identifythe fault and correct it and re assemble the Electric Hair Drier and test the Electric Hair Drier.
15	Dismantle the given faulty Vaccum Cleaner, identify the fault and correct it and re assemble the Vaccum Cleaner and test the Vaccum Cleaner.

PRACTICAL - I CONTENTS

S.No.	PRACTICAL - I CONTENTS	Page No.
1.	Transformer Winding	1
2.	Universal Motor Field Winding	7
3.	AC 230V 24 Slots 4 Pole Capacitor Start induction run motor concentric type Running Coil in stator slots with end connections	9
4.	AC 230V 24 Slots 4 Pole Capacitor Start induction run motor concentric type Starting Coil in stator slots with end connections	14
5.	AC 230V 36 Slots 4 Pole Capacitor Start induction run motor concentric type Running Coil in stator slots with end connections	19
6.	AC 230V 36 Slots 4 Pole Capacitor Start induction run motor concentric type Starting Coil in stator slots with end Connections	24
7.	Main winding of the salient type shaded pole motor	29
8.	Ceiling Fan of AC Single phase 230V	33
9.	AC 3 Phase 400/440V 24 Slots 4 pole stator of squirrel cage induction motor double layer diamond coil method One phase coil winding.	39
10.	AC 3 Phase 400/440V 24 Slots 4 pole stator of squirrel cage induction motor double layer diamond coil method Inserting the already wound one phase coil.	46
11.	AC 3 Phase 400/440V 36 Slots 4 pole stator of squirrel cage induction motor double layer diamond coil method One phase coil winding.	54
12.	AC 3 Phase 400/440V 36 Slots 4 pole stator of squirrel cage induction motor double layer diamond coil method Inserting the already wound one phase coil.	61
13.	DC Armature simplex lap winding.	68
14.	DC Armature simplex wave winding.	75
15.	AC 3 phase 400/440V squirrel cage induction motor Dismantling checking insulation and bearing and Assembling	80

PRACTICAL - II CONTENTS

S.No.	PRACTICAL - II CONTENTS	Page No.
1.	Steam Iron Box	86
2.	Automatic Iron Box	89
3.	Electric Stove	95
4.	Hot Plate	98
5.	Bread Toaster	101
6.	Electric Kettle	104
7.	Electric Geyser	107
8.	Coffee Perculator	111
9.	Mixer	114
10.	Egg Beader	117
11.	Table Fan	120
12.	Ceiling Fan	123
13.	Pump	127
14.	Electric Hair Drier	130
15.	Vaccum Cleaner	133

EXERCISE NO. 1

AIM

I. To wind the single phase 230V/12V-0-12V, 3A shell type Transformer.

II. To Check the continuity and operation with out vibration.

III. To measure the rated voltage and rated current on full load in secondary winding.

RELATED INFORMATION:

A transformer is a static device which transforms AC voltage from one value to another at the same frequency. It consists of two coil windings on a core made of magnetic material. AC voltage is applied to one of the coils which is called the primary coil. The other coil, from which output is taken, is known as the secondary coil.

The relation between primary and secondary voltage (V_1, V_2); currents (I_1, I_2), number of turns (N_1, N_2) respectively, is given by,

$$\frac{V_2}{V_1} = \frac{I_2}{I_1} = \frac{N_2}{N_1}$$

The ratio N_1, N_2 is known as transformation ratio K. If the secondary voltage (V_2), is more than the primary voltage (V_1), then it is know as a step-up transformer. If the secondary voltage is less than the primary voltage, then it is called a step-down transformer.

CORE

AC supply voltage is applied to the primary winding, therefore, the flux flowing through the core is alternating. To reduce the eddy current loss, the core is made of laminations. The thickness of laminations or stampings varies from 0.35 mm. to 0.55 mm. The laminations are insultated from each other by a thin coat of insulating varnish. For good magnetic characteristics, cold rolled silicon steel is used. Silicon content may be of the order of 3 to 4%.

There are two types of transformers, from the construction point of view.

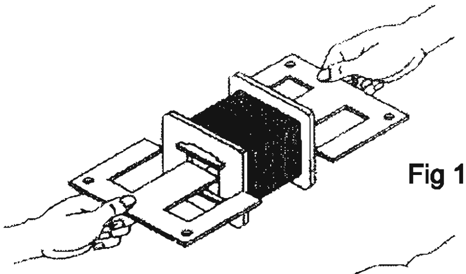

Fig 1.3(a)

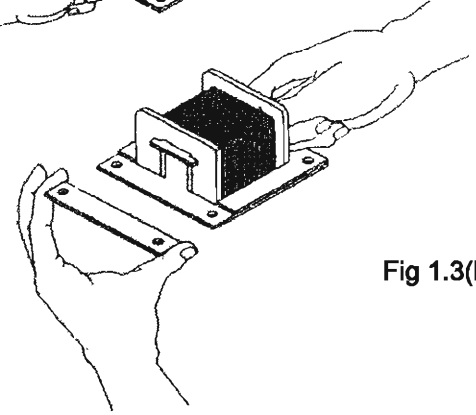

Fig 1.3(b)

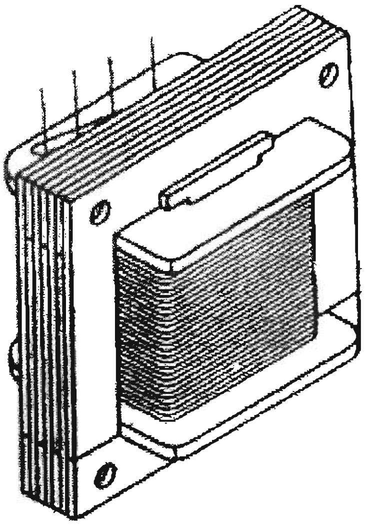

Fig 1.4

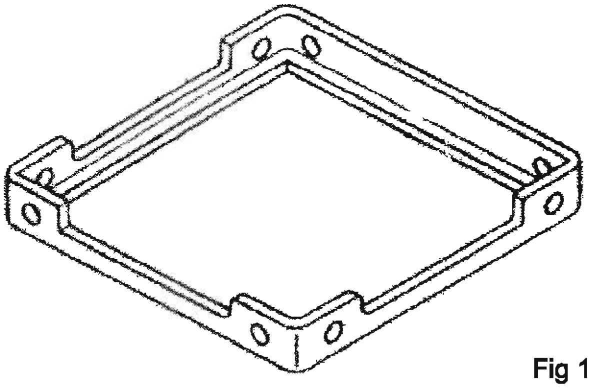

Fig 1.5

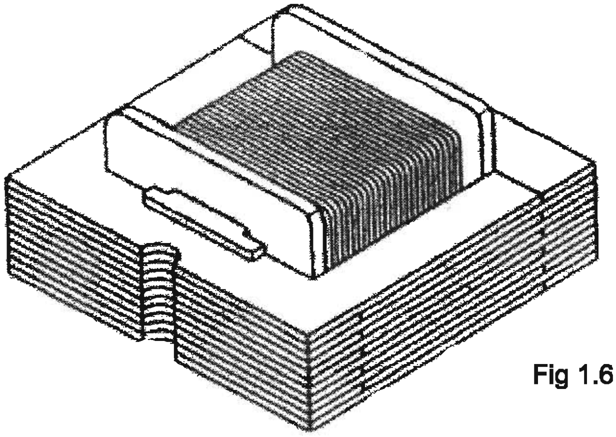

Fig 1.6

SHELL TYPE

In this type, the iron core surrounds the windings, as shown in Fig. 1.3 of (a) and (b).

Various types of laminations and stampings are shown in figs. 1.4, 1.5 and 1.6. In Figs. 1.4 (a) and (b), two L-shaped laminations are shown, indicating their mode of placement in the alternate layers. They are placed together to give the rectangular laminations of core. The complete laminated core consists of rectangular laminations placed alternately, one over the other as shown in Fig. 1.4(c), so that the joints are staggered. The joints are staggered to avoid a continuous air gap which increases the magnetising current. Further, if the joints are not staggered, the core will have less mechanical strength and there would be an undue humming noise during operation.

The core could also be assembled out of U and I types of laminations as shown in Fig. 1.5(a) and (b). The L and U-I laminations are generally used for the core type transformer. For making the shell type transformer, generally the combination of U and T laminations is used, as shown in Figs. 1.6 (a) and (b).

WINDINGS

In the case of small transformers, coils are usually wound with round wire in the form of a bobbin, in the same way as cotton thread is wound on a spool.

For small transformers of low voltage such as 230 V, about 5 to 8 turns per volt may be taken for primary winding, depending on the size of the transformer. Secondary number of turns can be obtained by the relationship.

$$N_2 = \frac{V_2}{V_1} \times N_1$$

The primary current can be calculated with the help of the given volt-ampere rating of the transformer.

Primary current I_1 = Volt-ampere rating $\div V_1$

Secondary current I_2 can be calculated from the relation

$$I_2 = \frac{N_2}{N_1} \times I_1$$

The area of the cross-section of the winding conductor depends upon the current. Normally, the size of the primary and secondary conductors will be different. To select the cross sectional size of the winding, conductor tables of the manufacturers may be consulted. Normally, the current density of 3 amperes per sq. mm.may be assumed for determining the size of the conductor.

EQUIPMENT AND MATERIALS

- Ø Stampings / laminations
- Ø Malinex insulating sheet
- Ø Thin insulating paper
- Ø Plastic or bakelite former
- Ø Small bolts and nuts for clamping stampings
- Ø Super enamelled copper winding wire
- Ø Cotton and empire tapes
- Ø Coil winding machine

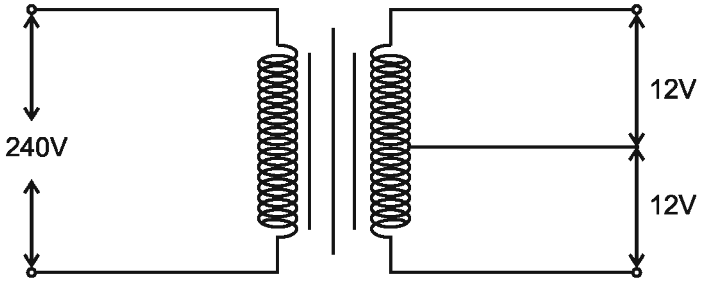

CALCULATIONS

FOR PRIMARY WINDING

No. of turns per volt	=	6 turns
No. of turns per 230 V	=	230 x 6
	=	1380 turns

CONDUCTOR SIZE

Amps per sq. mm = 3 Amps/sq.mm

Asper the table shown in text book:

The size of the conductor = 18 SWG is preforable.

FOR SECONDARY WIDNING

No. of turns per volt = 6 turns

No. of turns per 12volt = 12 x 6 = 72 turns

CONDUCTOR SIZE

Sead Current

$$I_2 = \frac{V_2}{N_1} \times I_1$$

$$I_2 = \frac{72}{1380} \times 3 = 0.15652A$$

Asper the table shown in the text book,

the size of the conductor

$$I_2 = \frac{0.1562}{3} \times = 0.052 \text{ Sq.mm}$$

$$= 32 \text{ SWG}$$

PROCEDURE

- ★ Select the size of the core and the type of the stamping (i.e.) for the shell type transformer, the combination of ‘U’ and ‘T’
- ★ Select the suitable size of the conductor for windings, as explained above.
- ★ Select/make a former of suitable size.
- ★ Wrap the former with malinex insulation sheet.
- ★ Wind the primary winding or the former preferably with the help of a winding machine.

- ★ After every 2 or 3 layers of primary winding, use a layer of thin insulating paper.
- ★ After completing the primary winding, wrap with malinex sheet.
- ★ Wind the secondary turns.
- ★ Bring out taps at suitable number of turns for 12-0-12 volts.
- ★ Wrap with empire or cotton tape for insulation and mechanical protection.
- ★ Assemble the core with winding as shown in Figs. 1.2 and 1.3.
- ★ Clamp/bolt the core.

TABLE

Voltage (Volts)			No. of turns	Current (Amp)	Size of wire (mm)
Winding	**Designed value**	**Actual Measured value**			
Primary					
Secondary					

PRECAUTION

While winding, the enamel wire should not come into contact with sharp metallic edges.

EXERCISE NO. 2

AIM

I. To wind the 230V, 750W, 2 pole universal motor new field winding and to insulate the proper area.

II. To insert the field winding and connect the end connections.

III. To text the function.

INTRODUCTORY INFORMATION AND RELATED THEORY

As the name itself indicates, the universal motor is a series wound or compensated series wound motor which can run on the same speed and output on both D.C. and single phase A.C. supply. This condition may be fulfilled when the A.C., and D.C. voltages are the same and the frequency of A.C. does not exceed 60 cycles per second.

Universal motor are used in domestic appliances such as vacuum cleaners, sewing machines, mixers, washing machines, portable drill machines, grinders, projectors etc.

The main parts of the universal motor are:

- A stator
- A rotor
- Brushes
- Brush holders
- end plates
- frame

EQUIPMENT AND RAW MATERIALS

EQUIPMENT:

Ø A universal motor of available

HAND TOOLS

- Ø B.E, spanner set – one set.
- Ø Electrician's knife 100mm – one
- Ø Insulated cutting pliers – 150mm – one
- Ø Insulated screw drivers – 150mm and 100mm – one each
- Ø Wooden mallet – one
- Ø B.P. hammer ¼ kg – one

MATERIALS

- Ø G.I./M.S. tray – one
- Ø Cotton waste – as required.

CIRCUT DIAGRAM

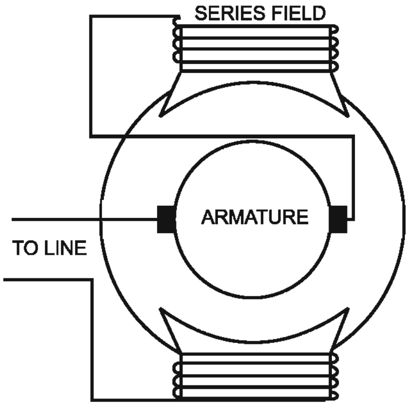

PROCEDURE

Remove the side and covers by using suitable tools. Remove the armature carefully. Disconnect the damaged field coils end connections. Remove the coil separately from the pole. Count the number of turns in the coil and record it. Measure the gauge number of the conductor by SWG and record it. Measure the poles dimension (a, b, c, d) and record it. Make a former as per the noted dimension by leathroid paper. Wind a new coil on the former by the conductor as same gauge number and number of turns which is recorded initially. Insert the coil carefully. Give the end connection by soldering. Cheek the continuity of the field winding. Reassemble the motor with correct connection. Connect the supply and cheek the function.

EXERCISE NO. 3

AIM

I. To prepare the running coil by concentric method for AC, 230V, 24 Slots, 4 Poles capacitor start induction run motor.

II. To insert the running coils is stator slots and to connect the end connections.

III. To conduct the earth test and continuity test.

RELATED INFORMATION

Single-phase motor has two main parts, stator and rotor. The stator is provided with starting and running winding with a phase shift of 90° electrical. These windings are made form super enamelled copper wire and housed in a stator slot (semi-closed) with adequate slot insulation. The running windings is connected in parallel with the starting winding having a capacitor in series. The arrangement is shown in the figer.

The capacitor creates a 90° phase lead of current in the starting windings. It makes the single-phase induction motor self-starting.

During the course of normal working life the insulation of the winding becomes weak due to ingress of moisture, over-heating, high reactance voltage, fluctuation at the time of switching on and off.

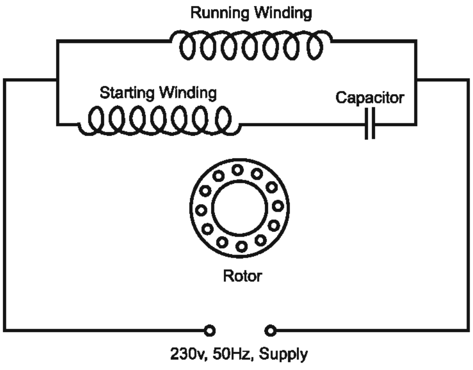

These may affect the life of and damage the insulation.

If the machine has electrical fault (short circuit, burnt winding, earth fault, or open circuit), it will always need rewinding.

For rewinding, data are normally collected from the old winding damaged winding of a similar machine.

EQUIPMENT AND MATERIALS

Sl. No.	Item	Quantity
1	Insulation tester (megger) 500 volt	1
2	Amperemeter 0-5A	1
3	Test lamp	1
4	Slot drift	1
5	Knife	1
6	Common hand tools	1 set
7	D.E. spanner set asserted 6mm – 24mm	1 set
8	Scissors	1
9	Hammer 1 lb	1
10	Mallet plastic	1
11	Wooden log of required size	1
12	Pulley puller 12” } As required	1 each
13	Bearing puller 6” } As required	
14	Allen key set	1
15	Electric soldering iron 230V, 250W	1
16	Rasp cut file H.R. 20 cm	1
17	Smooth file H.R. 20cm	1
18	Two feet four-fold wooden foot rule	1
19	Tennon saw	1
20	Hand drill machine with required drill bits	1
21	Wooden plank	1
22	Wood screw assorted as required	1
23	Empire sleezes 1,2,4 mm	3 mtrs
24	Super enamelled wires	
25	White cotton tape 10mm	1 roll
26	Twine thread Modi No. 2	10 mtrs
27	Milinex paper or polyster film 5 mill.	50 gms
28	Soldering flux and solder, Resin core solder	5 gms
29	Insulating varnish DR Becks Elmo 65 ER	½ ltr

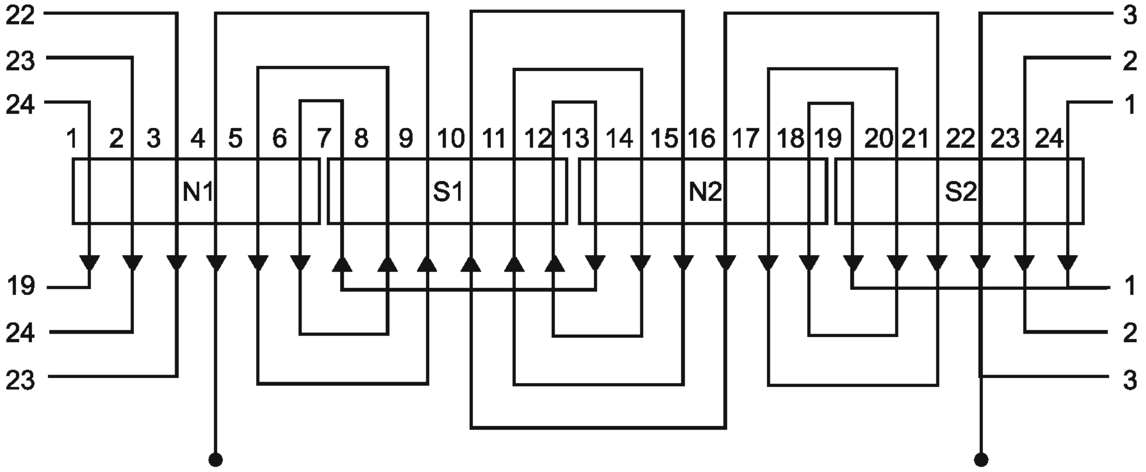

Single Phase AC Concentric Main Winding Diagram

PROCEDURE

- ★ Prepare a job card for the work.
- ★ Note down the name plate data before dismantling the motor.
- ★ Dismantle the motor after making the end-plates with punch marks.
- ★ Note down the coil data before stripping off the damaged winding.
- ★ Strip off the damaged coils
- ★ Prepare a winding diagram.
- ★ Clean the stator's slot and remove the burnt insulation.
- ★ Record the data of the coils, both running and starting winding.
- ★ Record the data of the turns in each coils group.
- ★ Line the slots with the required type and size of insulating materials.
- ★ Make the former as per the dimensions of the removed coil.
- ★ Wind one test coil on the former, insert it in the slot and check its dimension.
- ★ Change the former, if necessary, and wind the coils.
- ★ Insert the coils in the slot as per first data; the running winding and then starting winding over it.
- ★ Connect the coils in both running and starting winding as per the data/diagram to produce North and South poles.
- ★ Solder the connections and put sleeves.

- ★ Tape the windings on both sides and press to shape.
- ★ Insert wedge of fiber or bamboo to size out the slot.
- ★ Connect both winding leads to the terminals on the terminal plate.
- ★ Recheck for untapped joint, sleeves etc. before closing the end plates and reassemble the motor.
- ★ Test the motor for insulation resistance.
- ★ Have a trial run on load and note the parameters e.g. intake current, speed, temperature rise, etc.
- ★ If the trial is successful, dismantle the motor and impregnate with proper insulating varnish.
- ★ Heat the motor in oven with a controlled temperature 80- 100·C for 10 to 12 hours.
- ★ Clean the stator by removing the excessive deposits of varnish on the cores.
- ★ Reassemble the motor and have a trial run on load and no-load.

NAME PLATE DATA MAKE ....

H.P.	RPM	Volt	Amps ....
Cycle	Type	Frame	Style ....
Temp	Model	S.No.	Phase ....

DATE (BEFORE STRIPPING OFF THE WINDING)

- ★ No. of slots
- ★ No. of coils
- ★ No. of coils in R/W
- ★ No. of coils in S/W
- ★ Pole pitch
- ★ Coil pitch
- ★ Type of winding
- ★ Type of connections
- ★ No. of coils per coil group in running and starting winding.

DATA (AFTER STRIPPING OFF THE WINDING)

- ★ Nomenclature, type and size of coil insulation.
- ★ Nomenclature, type and size of coil insulation.
- ★ Coil size.
- ★ Size and type of wire.
- ★ No. of turns in running and starting winding coils in different pitch.

PRECAUTIONS

- ★ Must put the punch mark on the end covers and the body, before removing the end plates.
- ★ While dismantling see that no damage is caused to the centrifugal switch on any other part of the motor.
- ★ Must note all the data very carefully in sequence and ensure that no parameter is left out.
- ★ Thoroughly clean the motor before winding without causing any damage to the cores.
- ★ Ensure that the former is of exact dimensions.
- ★ Check the insulation resistance of the running and starting windings, to each and between them.
- ★ While dismantling and assembling ensure that no damage is caused to the windings.
- ★ Pre-heat before impregnation to dry the moisture.

EXERCISE NO. 4

AIM

I. To prepare the starting coil by concentric method for AC, 230V, 24 Slots, 4 Poles capacitor start induction run motor.

II. To insert the starting coils is stator slots and to connect the end connections.

III. To conduct the earth test and continuity test.

RELATED INFORMATION

Single-phase motor has two main parts, stator and rotor. The stator is provided with starting and running winding with a phase shift of 90° electrical. These windings are made form super enamelled copper wire and housed in a stator slot (semi-closed) with adequate slot insulation. The running windings is connected in parallel with the starting winding having a capacitor in series. The arrangement is shown in the figer.

The capacitor creates a 90° phase lead of current in the starting windings. It makes the single-phase induction motor self-starting.

During the course of normal working life the insulation of the winding becomes weak due to ingress of moisture, over-heating, high reactance voltage, fluctuation at the time of switching on and off.

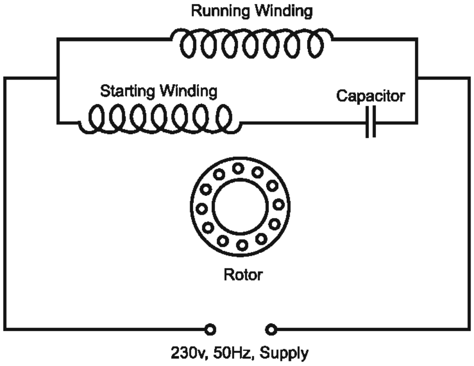

These may affect the life of and damage the insulation.

If the machine has electrical fault (short circuit, burnt winding, earth fault, or open circuit), it will always need rewinding.

For rewinding, data are normally collected from the old winding damaged winding of a similar machine

EQUIPMENT AND MATERIALS

Sl. No.	Item	Quantity
1	Insulation tester (megger) 500 volt	1
2	Amperemeter 0-5A	1
3	Test lamp	1
4	Slot drift	1
5	Knife	1
6	Common hand tools	1 set
7	D.E. spanner set asserted 6mm – 24mm	1 set
8	Scissors	1
9	Hammer 1 lb	1
10	Mallet plastic	1
11	Wooden log of required size	1
12	Pulley puller 12” } As required	1 each
13	Bearing puller 6” } As required	
14	Allen key set	1
15	Electric soldering iron 230V, 250W	1
16	Rasp cut file H.R. 20 cm	1
17	Smooth file H.R. 20cm	1
18	Two feet four-fold wooden foot rule	1
19	Tennon saw	1
20	Hand drill machine with required drill bits	1
21	Wooden plank	1
22	Wood screw assorted as required	1
23	Empire sleezes 1,2,4 mm	3 mtrs
24	Super enamelled wires	
25	White cotton tape 10mm	1 roll
26	Twine thread Modi No. 2	10 mtrs
27	Milinex paper or polyster film 5 mill.	50 gms
28	Soldering flux and solder, Resin core solder	5 gms
29	Insulating varnish DR Becks Elmo 65 ER	½ ltr

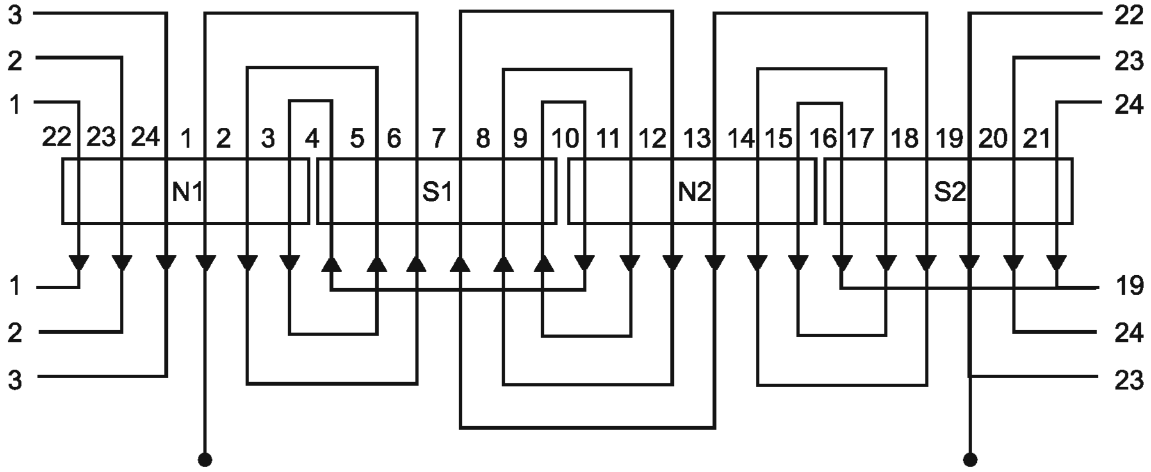

Single Phase AC Concentric Starting Winding Diagram

PROCEDURE

- ★ Prepare a job card for the work.
- ★ Note down the name plate data before dismantling the motor.
- ★ Dismantle the motor after making the end-plates with punch marks.
- ★ Note down the coil data before stripping off the damaged winding.
- ★ Strip off the damaged coils
- ★ Prepare a winding diagram.
- ★ Clean the stator's slot and remove the burnt insulation.
- ★ Record the data of the coils, both running and starting winding.
- ★ Record the data of the turns in each coils group.
- ★ Line the slots with the required type and size of insulating materials.
- ★ Make the former as per the dimensions of the removed coil.
- ★ Wind one test coil on the former, insert it in the slot and check its dimension.
- ★ Change the former, if necessary, and wind the coils.
- ★ Insert the coils in the slot as per first data; the running winding and then starting winding over it.
- ★ Connect the coils in both running and starting winding as per the data/diagram to produce North and South poles.
- ★ Solder the connections and put sleeves.

- ★ Tape the windings on both sides and press to shape.
- ★ Insert wedge of fiber or bamboo to size out the slot.
- ★ Connect both winding leads to the terminals on the terminal plate.
- ★ Recheck for untapped joint, sleeves etc. before closing the end plates and reassemble the motor.
- ★ Test the motor for insulation resistance.
- ★ Have a trial run on load and note the parameters e.g. intake current, speed, temperature rise, etc.
- ★ If the trial is successful, dismantle the motor and impregnate with proper insulating varnish.
- ★ Heat the motor in oven with a controlled temperature 80- 100°C for 10 to 12 hours.
- ★ Clean the stator by removing the excessive deposits of varnish on the cores.
- ★ Reassemble the motor and have a trial run on load and no-load.

NAME PLATE DATA MAKE ....

H.P.	RPM	Volt	Amps ....
Cycle	Type	Frame	Style ....
Temp	Model	S.No.	Phase ....

DATE (BEFORE STRIPPING OFF THE WINDING)

- ★ No. of slots
- ★ No. of coils
- ★ No. of coils in R/W
- ★ No. of coils in S/W
- ★ Pole pitch
- ★ Coil pitch
- ★ Type of winding
- ★ Type of connections
- ★ No. of coils per coil group in running and starting winding.

DATA (AFTER STRIPPING OFF THE WINDING)

- ★ Nomenclature, type and size of coil insulation.
- ★ Nomenclature, type and size of coil insulation.
- ★ Coil size.
- ★ Size and type of wire.
- ★ No. of turns in running and starting winding coils in different pitch.

PRECAUTIONS

- ★ Must put the punch mark on the end covers and the body, before removing the end plates.
- ★ While dismantling see that no damage is caused to the centrifugal switch on any other part of the motor.
- ★ Must note all the data very carefully in sequence and ensure that no parameter is left out.
- ★ Thoroughly clean the motor before winding without causing any damage to the cores.
- ★ Ensure that the former is of exact dimensions.
- ★ Check the insulation resistance of the running and starting windings, to each and between them.
- ★ While dismantling and assembling ensure that no damage is caused to the windings.
- ★ Pre-heat before impregnation to dry the moisture.

EXERCISE NO. 5

AIM

I. To prepare the running coil by concentric method for AC, 230V, 36 Slots, 4 Poles capacitor start induction run motor.

II. To insert the running coils is stator slots and to connect the end connections.

III. To conduct the earth test and continuity test.

RELATED INFORMATION

Single-phase motor has two main parts, stator and rotor. The stator is provided with starting and running winding with a phase shift of 90· electrical. These windings are made form super enamelled copper wire and housed in a stator slot (semi-closed) with adequate slot insulation. The running windings is connected in parallel with the starting winding having a capacitor in series. The arrangement is shown in the figer.

The capacitor creates a 90· phase lead of current in the starting windings. It makes the single-phase induction motor self-starting.

During the course of normal working life the insulation of the winding becomes weak due to ingress of moisture, over-heating, high reactance voltage, fluctuation at the time of switching on and off.

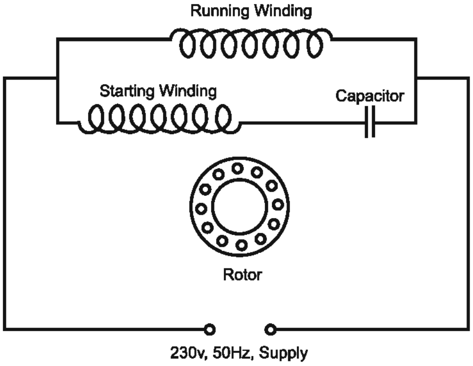

These may affect the life of and damage the insulation.

If the machine has electrical fault (short circuit, burnt winding, earth fault, or open circuit), it will always need rewinding.

For rewinding, data are normally collected from the old winding damaged winding of a similar machine.

EQUIPMENT AND MATERIALS

Sl. No.	Item	Quantity
1	Insulation tester (megger) 500 volt	1
2	Amperemeter 0-5A	1
3	Test lamp	1
4	Slot drift	1
5	Knife	1
6	Common hand tools	1 set
7	D.E. spanner set asserted 6mm – 24mm	1 set
8	Scissors	1
9	Hammer 1 lb	1
10	Mallet plastic	1
11	Wooden log of required size	1
12	Pulley puller 12” } As required	1 each
13	Bearing puller 6” } As required	
14	Allen key set	1
15	Electric soldering iron 230V, 250W	1
16	Rasp cut file H.R. 20 cm	1
17	Smooth file H.R. 20cm	1
18	Two feet four-fold wooden foot rule	1
19	Tennon saw	1
20	Hand drill machine with required drill bits	1
21	Wooden plank	1
22	Wood screw assorted as required	1
23	Empire sleezes 1,2,4 mm	3 mtrs
24	Super enamelled wires	
25	White cotton tape 10mm	1 roll
26	Twine thread Modi No. 2	10 mtrs
27	Milinex paper or polyster film 5 mill.	50 gms
28	Soldering flux and solder, Resin core solder	5 gms
29	Insulating varnish DR Becks Elmo 65 ER	½ ltr

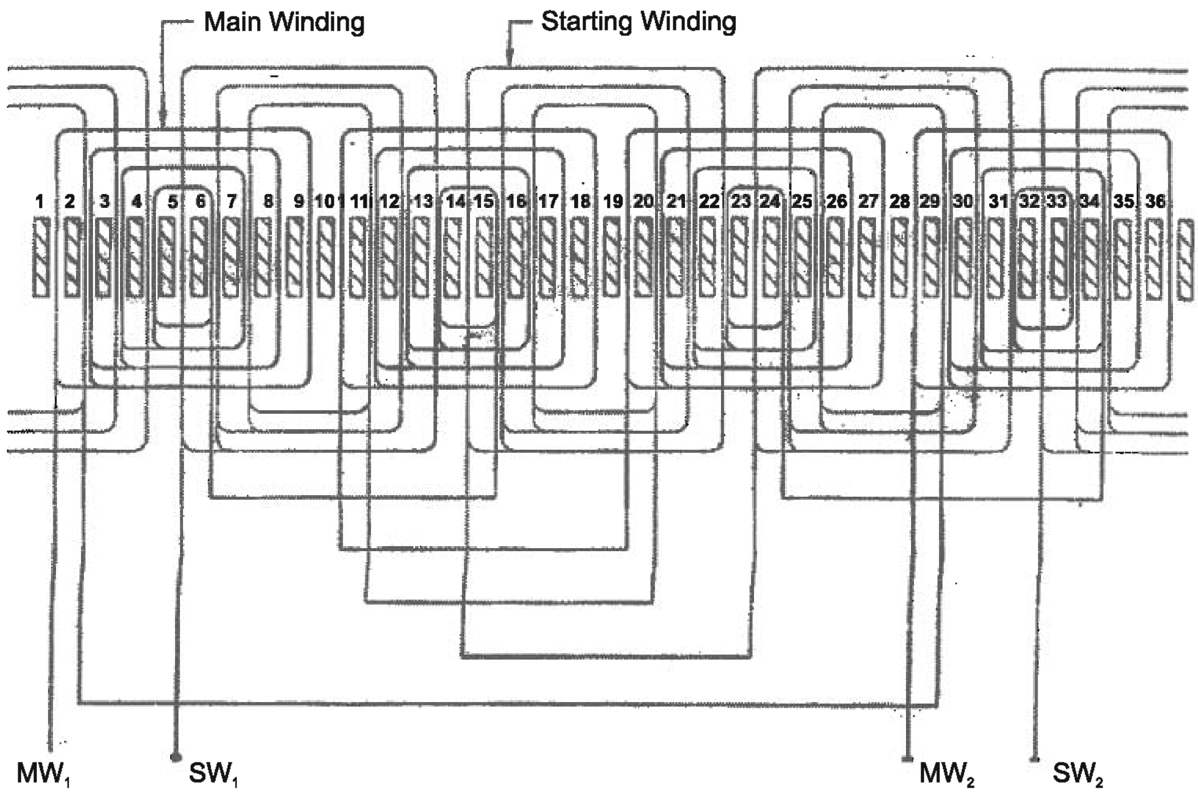

AC Single Phase 36 Solts 4 pole Concentric winding diagram

PROCEDURE

- ★ Prepare a job card for the work.
- ★ Note down the name plate data before dismantling the motor.
- ★ Dismantle the motor after making the end-plates with punch marks.
- ★ Note down the coil data before stripping off the damaged winding.
- ★ Strip off the damaged coils
- ★ Prepare a winding diagram.
- ★ Clean the stator's slot and remove the burnt insulation.
- ★ Record the data of the coils, both running and starting winding.
- ★ Record the data of the turns in each coils group.
- ★ Line the slots with the required type and size of insulating materials.
- ★ Make the former as per the dimensions of the removed coil.
- ★ Wind one test coil on the former, insert it in the slot and check its dimension.
- ★ Change the former, if necessary, and wind the coils.
- ★ Insert the coils in the slot as per first data; the running winding and then starting winding over it.

- ★ Connect the coils in both running and starting winding as per the data/diagram to produce North and South poles.
- ★ Solder the connections and put sleeves.
- ★ Tape the windings on both sides and press to shape.
- ★ Insert wedge of fiber or bamboo to size out the slot.
- ★ Connect both winding leads to the terminals on the terminal plate.
- ★ Recheck for untapped joint, sleeves etc. before closing the end plates and reassemble the motor.
- ★ Test the motor for insulation resistance.
- ★ Have a trial run on load and note the parameters e.g. intake current, speed, temperature rise, etc.
- ★ If the trial is successful, dismantle the motor and impregnate with proper insulating varnish.
- ★ Heat the motor in oven with a controlled temperature 80- 100°C for 10 to 12 hours.
- ★ Clean the stator by removing the excessive deposits of varnish on the cores.
- ★ Reassemble the motor and have a trial run on load and no-load.

NAME PLATE DATA MAKE ....

H.P.	RPM	Volt	Amps ....
Cycle	Type	Frame	Style ....
Temp	Model	S.No.	Phase ....

DATE (BEFORE STRIPPING OFF THE WINDING)

- ★ No. of slots
- ★ No. of coils
- ★ No. of coils in R/W
- ★ No. of coils in S/W
- ★ Pole pitch
- ★ Coil pitch
- ★ Type of winding
- ★ Type of connections
- ★ No. of coils per coil group in running and starting winding.

DATA (AFTER STRIPPING OFF THE WINDING)

- ★ Nomenclature, type and size of coil insulation.
- ★ Nomenclature, type and size of coil insulation.
- ★ Coil size.
- ★ Size and type of wire.
- ★ No. of turns in running and starting winding coils in different pitch.

PRECAUTIONS

- ★ Must put the punch mark on the end covers and the body, before removing the end plates.
- ★ While dismantling see that no damage is caused to the centrifugal switch on any other part of the motor.
- ★ Must note all the data very carefully in sequence and ensure that no parameter is left out.
- ★ Thoroughly clean the motor before winding without causing any damage to the cores.
- ★ Ensure that the former is of exact dimensions.
- ★ Check the insulation resistance of the running and starting windings, to each and between them.
- ★ While dismantling and assembling ensure that no damage is caused to the windings.
- ★ Pre-heat before impregnation to dry the moisture.

These may affect the life of and damage the insulation.

EXERCISE NO. 6

AIM

I. To prepare the starting coil by concentric method for AC, 230V, 36 Slots, 4 Poles capacitor start induction run motor.

II. To insert the starting coils is stator slots and to connect the end connections.

III. To conduct the earth test and continuity test.

RELATED INFORMATION

Single-phase motor has two main parts, stator and rotor. The stator is provided with starting and running winding with a phase shift of 90° electrical. These windings are made form super enamelled copper wire and housed in a stator slot (semi-closed) with adequate slot insulation. The running windings is connected in parallel with the starting winding having a capacitor in series. The arrangement is shown in the figer.

The capacitor creates a 90° phase lead of current in the starting windings. It makes the single-phase induction motor self-starting.

During the course of normal working life the insulation of the winding becomes weak due to ingress of moisture, over-heating, high reactance voltage, fluctuation at the time of switching on and off.

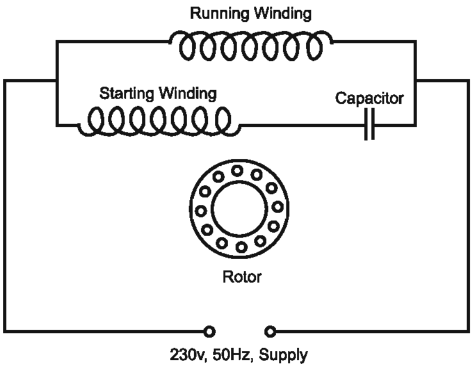

These may affect the life of and damage the insulation.

If the machine has electrical fault (short circuit, burnt winding, earth fault, or open circuit), it will always need rewinding.

For rewinding, data are normally collected from the old winding damaged winding of a similar machine.

EQUIPMENT AND MATERIALS

Sl. No.	Item	Quantity
1	Insulation tester (megger) 500 volt	1
2	Amperemeter 0-5A	1
3	Test lamp	1
4	Slot drift	1
5	Knife	1
6	Common hand tools	1 set
7	D.E. spanner set asserted 6mm – 24mm	1 set
8	Scissors	1
9	Hammer 1 lb	1
10	Mallet plastic	1
11	Wooden log of required size	1
12	Pulley puller 12” } As required	1 each
13	Bearing puller 6” } As required	
14	Allen key set	1
15	Electric soldering iron 230V, 250W	1
16	Rasp cut file H.R. 20 cm	1
17	Smooth file H.R. 20cm	1
18	Two feet four-fold wooden foot rule	1
19	Tennon saw	1
20	Hand drill machine with required drill bits	1
21	Wooden plank	1
22	Wood screw assorted as required	1
23	Empire sleezes 1,2,4 mm	3 mtrs
24	Super enamelled wires	
25	White cotton tape 10mm	1 roll
26	Twine thread Modi No. 2	10 mtrs
27	Milinex paper or polyster film 5 mill.	50 gms
28	Soldering flux and solder, Resin core solder	5 gms
29	Insulating varnish DR Becks Elmo 65 ER	½ ltr

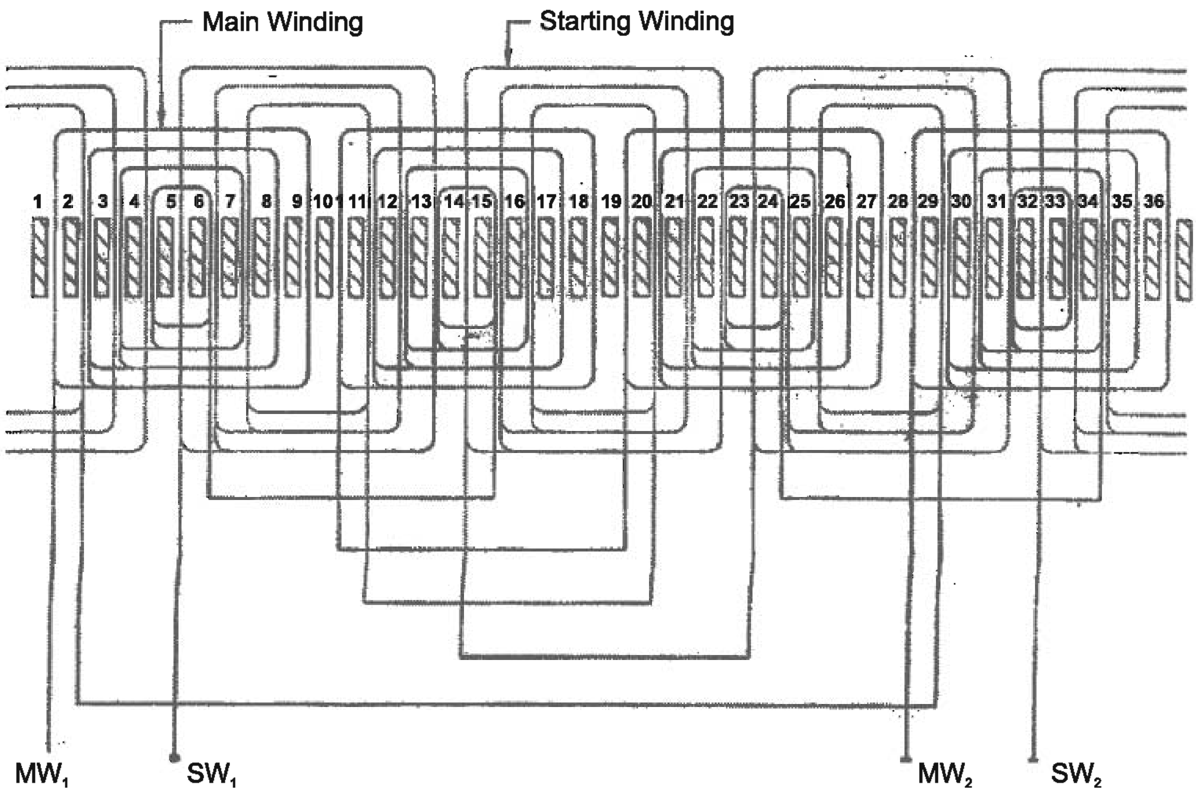

AC Single Phase 36 Solts 4 pole Concentric winding diagram

PROCEDURE

- ★ Prepare a job card for the work.
- ★ Note down the name plate data before dismantling the motor.
- ★ Dismantle the motor after making the end-plates with punch marks.
- ★ Note down the coil data before stripping off the damaged winding.
- ★ Strip off the damaged coils
- ★ Prepare a winding diagram.
- ★ Clean the stator's slot and remove the burnt insulation.
- ★ Record the data of the coils, both running and starting winding.
- ★ Record the data of the turns in each coils group.
- ★ Line the slots with the required type and size of insulating materials.
- ★ Make the former as per the dimensions of the removed coil.
- ★ Wind one test coil on the former, insert it in the slot and check its dimension.
- ★ Change the former, if necessary, and wind the coils.

- ★ Insert the coils in the slot as per first data; the running winding and then starting winding over it.
- ★ Connect the coils in both running and starting winding as per the data/diagram to produce North and South poles.
- ★ Solder the connections and put sleeves.
- ★ Tape the windings on both sides and press to shape.
- ★ Insert wedge of fiber or bamboo to size out the slot.
- ★ Connect both winding leads to the terminals on the terminal plate.
- ★ Recheck for untapped joint, sleeves etc. before closing the end plates and reassemble the motor.
- ★ Test the motor for insulation resistance.
- ★ Have a trial run on load and note the parameters e.g. intake current, speed, temperature rise, etc.
- ★ If the trial is successful, dismantle the motor and impregnate with proper insulating varnish.
- ★ Heat the motor in oven with a controlled temperature 80- 100°C for 10 to 12 hours.
- ★ Clean the stator by removing the excessive deposits of varnish on the cores.
- ★ Reassemble the motor and have a trial run on load and no-load.

NAME PLATE DATA MAKE ....

H.P.	RPM	Volt	Amps ....
Cycle	Type	Frame	Style ....
Temp	Model	S.No.	Phase ....

DATE (BEFORE STRIPPING OFF THE WINDING)

- ★ No. of slots
- ★ No. of coils
- ★ No. of coils in R/W
- ★ No. of coils in S/W
- ★ Pole pitch
- ★ Coil pitch

- ★ Type of winding
- ★ Type of connections
- ★ No. of coils per coil group in running and starting winding.

DATA (AFTER STRIPPING OFF THE WINDING)

- ★ Nomenclature, type and size of coil insulation.
- ★ Nomenclature, type and size of coil insulation.
- ★ Coil size.
- ★ Size and type of wire.
- ★ No. of turns in running and starting winding coils in different pitch.

PRECAUTIONS

- ★ Must put the punch mark on the end covers and the body, before removing the end plates.
- ★ While dismantling see that no damage is caused to the centrifugal switch on any other part of the motor.
- ★ Must note all the data very carefully in sequence and ensure that no parameter is left out.
- ★ Thoroughly clean the motor before winding without causing any damage to the cores.
- ★ Ensure that the former is of exact dimensions.
- ★ Check the insulation resistance of the running and starting windings, to each and between them.
- ★ While dismantling and assembling ensure that no damage is caused to the windings.
- ★ Pre-heat before impregnation to dry the moisture.

These may affect the life of and damage the insulation.

EXERCISE NO. 7

AIM

— To refind the main winding of AC, 230V salient pole type shaded pole motor.l

— To Test the wounded motors.

REQUIREMENTS

TOOLS AND INSTRUMENTS

★	Electrician tool kit	-	1 No.
★	Nylon hammer 5cm dia x 8cm long head	-	1 No.
★	Cold chisel 200mm	-	1 No.
★	Multimeter	-	1 No.
★	Megger 500 volt		
★	Weighing machine 0-3kg with 10g resolution	-	1 No.
★	Scissors 200 mm	-	1 No.
★	Fibre or Hylam knife edge assorted sizes	-	4 Nos.
★	Soldering iron 125W, 240V	-	1 No.
★	Hacksaw frame with blade 300mm	-	1 No.

EQUIPMENT / MACHINES

	Burnt out table fan		
★	Shaded pole type	-	1 No.

MATERIALS

★	Leatheroid paper/Milinex size and quantity	-	as reqd.
★	Super -enamelled copper wire	-	as reqd.
★	Sleeves empire / PVC	-	as requd
★	Binding/Hemp thred	-	as requd
★	Bamboo wedges	-	as reqd.
★	Insulating varnish (Air-dry)	-	as reqd.
★	Resin-core solder 60% / 40%	-	10g.
★	Fibre sheet 6mm thick	-	as requd

- ★ Fibre foot (to suit the stator slots to the prepared by the electrician himself) - as requd
- ★ Used hacksaw blade - 1 No.

PROCEDURE

TASK1: RECORDING FOR DISMANTLING A TABLE FAN AND COLLECTING OF WIDNING DATA

1. Record the available name-plate details of the table fan in table 1.
2. Remove the guard from the fan body after loosening the guard clamps (Figure.1)
3. Loosen the lock screq indicated as in Figure 1 of the fan blade and remove the blade assembly from the shaft.
4. Make the identification punch marks on the body as corresponding position on the front and rear end covers of the table fan as referred to in figure 1. Making should be such that the same end cover is fitted to the same side of the body whild assembling.
5. Remove the oscillation mechanism lever screws.
6. Unscreq and remove the rear guard and end nuts.

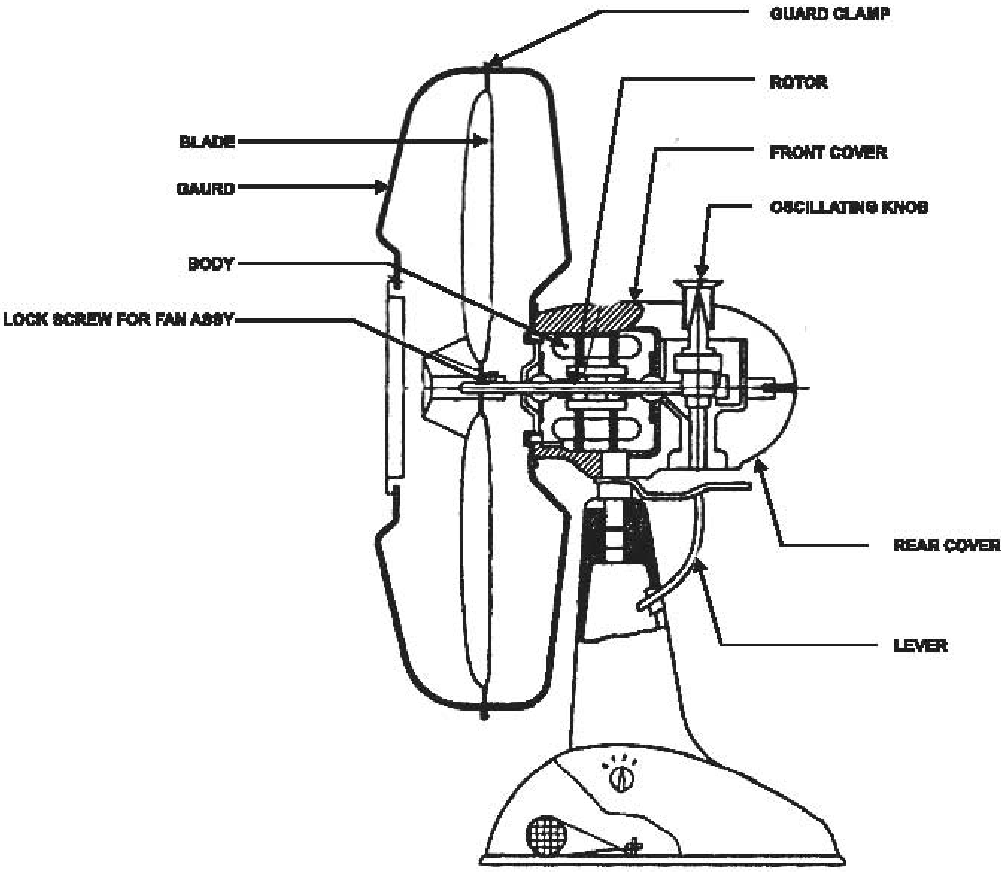

7. Remove the end covers.
8. Remove the rotor from the stator. Carefully slip the rotor straight out, without damaging the stator coils.
9. Check the bearing for its proper function. If there is any end play replace the bearings.
10. Clean the winding of the fan.
11. Record further possible data in Table 2.

TABLE : 1

NAME-PLATE DETAILS OF INDUCTION MOTOR

Manufacturer ....

Trade Name ....

Voltage V

Input/watt .... W.

Size of fan(Sweep) ....mm

Number of blades ....

Type of bearing ....

Frequency .... Hz

Serial No. ....

Type AC/DC ....

Oscillating mechanism .... Yes / No.

R.P.M ....

Class of insulation ....

No. ....

TABLE 2

DATA TO BE TAKEN FROM THE STATOR (before removing the coils)

No. of slots .... No. of poles

Wire insulation .... windin Hand / Form

Type of connection .... Whole coil/Half coil

Pole insulation material .... Size ....

Type of lead wire size ....

Type of sleeve and size ....

TABLE 2A

PROCEDURE FOR REWINDING FIELD COILS OF SHADED POLE MOTOR

1. Remove the coils from the pole carefully without distorting the shape of the coil and record the data in Table 3, wherever applicable. Normally metal clamps are used to hold the coils in position which are to be removed to dislodge the coils.
2. After removing the coils clean the poles/slots. Note the type of insulating material used around the poles. The same type has to be replaced while rewinding.
3. Follow the steps or skill information Exercise No. 1203 to wind the field coil.
4. After preparation of the field coil, tape and varnish, then insert the coil into the salient poles and connect them according to the original connection. Check for correct polarity and measure the insulation resistance.
5. Assemble the fan and test run the fan.

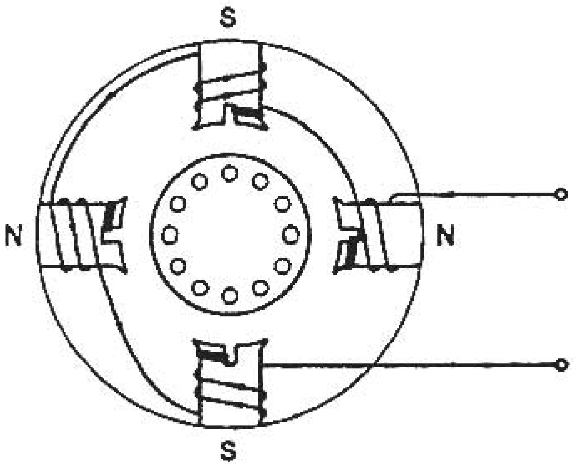

TABLE 3

Description of Winding	Size and Kind of wire	No. of coils	Turns per coil	Weight per coil without wrapped	Total Wt. of the coils without wrapped	Coil pitch	Remarks
Shaded poletype field coils							

EXERCISE NO. 8

AIM

— To rewind a ceiling fan

— To objectives: At the end of this exercise you shall be able to

— To dismantle a ceiling fan(R)

— To Strip the coils from the ceiling fan

— To prepare the winding table and draw the developed diagram

— To prepare the slot liners and insert in the slots(R)

— To prepare the coils for the ceiling fan winding (starting and running)

— To lay the coils in the slots and insulate them(R)

— To make end connections as per data taken(R)

— To solder and insulate the end connections and leads(R)

— To bind with a tape and shape the overhangs(R)

— To test the winding(R)

— To assemble and test the ceiling fan(R)

REQUIREMENTS

TOOLS AND INSTRUMENTS

★ Nylon hammer, 5cm dia x 8cm length	- 1 No.
★ Screwdriver 150mm	- 1 No.
★ Insulated cutting pliers 150mm	- 1 No.
★ D.B.knife 100mm	- 1 No.
★ Multimeter	- 1No.
★ Megger 500V	- 1 No
★ Hacksaw frame with blade 300mm	- 1 No
★ Soldering iron 60 W, 250v	- 1 No
★ Scissors 150 mm	- 1 No

EQUIPMENT / MACHINES

★ Ceiling fan 1200 mm sweep (Having burnt our winding) -1 No.

MATERIALS

as required,

- ★ Super -enamelled copper wire
- ★ Leatheroid paper / melinex sheet
- ★ Sleeves empire / P.V.C.
- ★ Binding hemp thread
- ★ Bamboo wedges
- ★ Insulating varnish (air-dry)
- ★ Resin-core solder 60/40
- ★ Connecting lead wires 23/0.2
- ★ Thinner

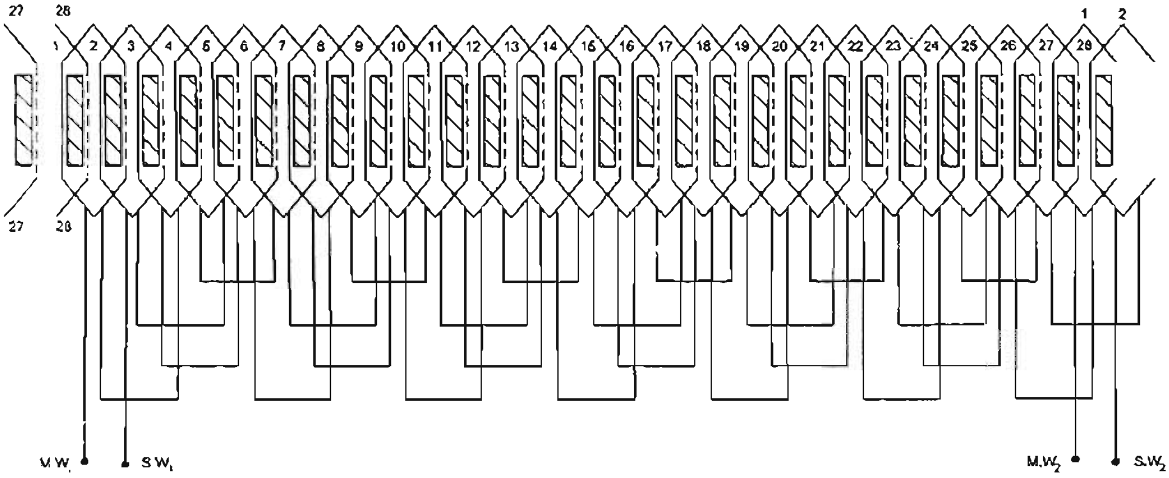

CEILING FAN WINDING DEVELOPMENT DIAGRAM
28 SLOTS, 28 COILS (14 COILS. M.W, 14COILS. S.W) FULL COILS CONNECTIONS

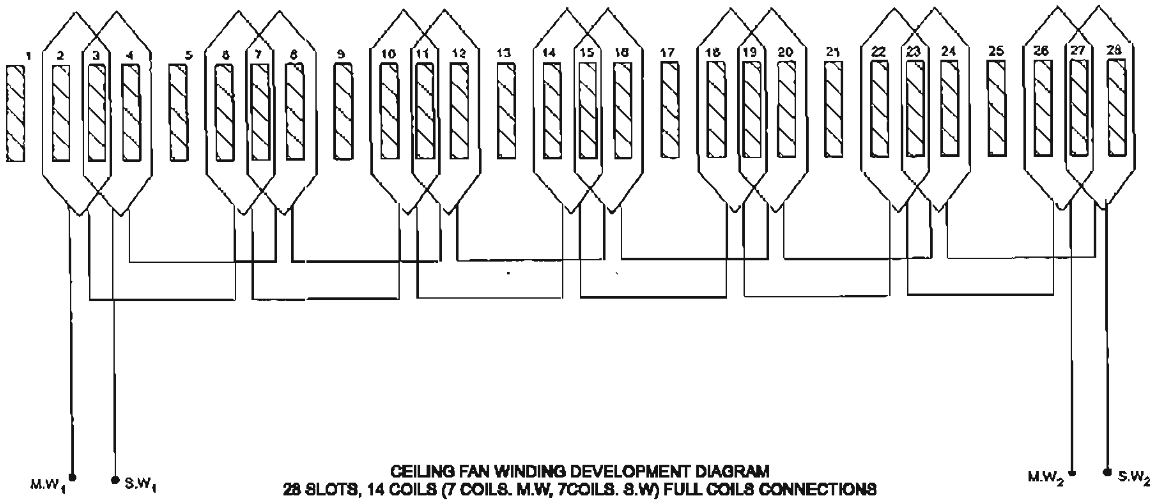

CEILING FAN WINDING DEVELOPMENT DIAGRAM
28 SLOTS, 14 COILS (7 COILS. M.W, 7COILS. S.W) FULL COILS CONNECTIONS

TABLE - 1

DETAILS OF CEILING FAN

Manufacturer's Name...

Voltage.................>>>..........V

Frequency.......................H$_z$

Input / Watts ....>>........W

Size of fan (sweep).......................mm

Number of blades............................

Serial No...................................

Type AC/DC..........................

R.P.M...

Type of bearing....................No...........................

Class of insulation ....

Bearing make ....

WINDING DATA

No. of slots ....

Wire insulation ....

Type of connetion .... whole coil / Half coil

Pole / slot insulation material ....

Thickness ....

No. of poles ....

Winding : machine / hand / form

Size ....

Type of Lead wire size ....

Size of coil Length .... mm

Width .... mm

Winding Type	Size and kind of wire	No. of coils	Turns per coil	Weight per coil	Total Weight	Coil Pitch	Remarks
Running							
Stating							

Stating winding is kept in .... slots.
Running winding is kept in .... slots.
Overhang measured form the edge of the core Type of binding
Connection leads .... Size
Capacitor .... mf Volts Connection diagram (draw in your record)
Developed diagram (draw in your record)

PROCEDURE

TASK1

1. Note the name-plate details of the ceiling fan and enter them in Table 1.
2. Unscrew the fasteners and remove the fan blade. keep the fan blade and fasteners in a safe placen so that fan blade does not gets bent. If it gets bent, it will make unusual sound and air blow will be reduced.
3. Observe the connections in the terminal box. Mark them in a separate sheet of paper and disconnect the connections.
4. Dismantle the fan and remove the stator. Keep all themachince screws and loose parts in a separate tray safely.
5. Untie the end connections from the winding. Trace the connections and draw the end of connection and developed diagrams in your record. Refer to Related Theory Ex.No.1204 for your guidance. Indicate which winding is in the inner slot and which one is in the outer slot. Ascertain whether the connceion is of whole coil or half coil. Enter the details in table 1.
6. Record all possible data in Table 1.
7. Measure the overhang dimesions from the edge of the core and enter the details in Table1.
8. Record the type of binding i n Table 1.
9. Remove all wedges, with the use of a wedge remover or a piece of hacksaw blade having grounded teeth. As the winding is kept in the stationary part of the fan, certain manufactureres use thick leatheroid paper instead of wedges.
10. Leavings one coil each in the starting and running windings cut the overhang end of the coils in the middle at both sides of the core.
11. Remove the coils by pulling the cut ends with the help of pincers or pliers.
12. Record the type, size of wire and number of turns used in both the windings. Record the data in Table 1.
13. Apply thinner on the left over coils, loosen the strands and carefully remove them out of the slots.

14. Measure the weight of one coil each in the starting and main windings as well as the total weight of the coils and enter these details in Table. 1.
15. Set the core if it is mangled and clean the slots.
16. Check the bearing for its condition; if it is found faulty replace the bearing.
17. Select the insulation paper of the same grade and size as in the original and prepare the slot liners in required numbers.
18. Insulate the slots with the prepared slot liners.
19. Make a former according to the old coil size taken in step 13. Generally the size of the running and starting winding will be the same for a ceiling fan.
20. Wind the coil in the former, one each for running and starting winding taking care to maintain the same turns with the same size of winding wire. Check the correctness of the coils. There may be a change in the size of the winding wire as well as change in the number of turns between starting and main winding. Check it.
21. Make the required numbr of main and starting winding coils.
22. For your guidance, a partial view of the fan stator is shown in Fig. 1. Compare the fan stator in hand with the one shown in Fig. 1. To simplify the procedure, winding as shown in Fit. 1, is referred to the following procedural steps. For example the coil throw is taken as 1-3. In winding the fan stator of your choice, follow the coil throw as notified in the data and modify the given procedure accordingly.
23. Mark the stator slots as shown in Fig. 1. Let the outer slots be numbered in odd and the inner slots in even numbers.
24. Properly fix two guide papers in slot number 2 (inner slot). Ascertain the core end where the connection end should be placed. Winding to be started in the inner slots.
25. Inser one coil side of first coil (running winding) in slot 2. While placing the coils take care to insert the turns in small bunches smoothly. Avoid rubbing of any part of the coil on the core.
26. Shift and place the guide paper in slot 4 and inser the other coil side of the first coil.
27. Use an awl to adjust the coil side placed in slot 4 towards the left side of the slot.
28. Insert one coil side of another coil (say 2nd coil) in slot 4.
29. Use a awl to set it to the right side of the slot 4. Be sure not to damage the winding wire in this process.
30. Use the wedge as in original to close the slot 4.
31. Insert the other coil side of the 2nd coil in slot 6.
32. Proceed in the same manner till you have insert the coils in the inner slots and wedged them.
33. Insert one coil side of the 1st coil of the starting winding in slot 1 and the other coil side of the same coil in slot 3.

34. Insert one coil side of the 2nd coil of the starting winding in slot 3 and the other coil side of the same coil into slot 5. Wdge slot 3.
35. Proceed in the same manner till you have inserted all the startin winding coils in the outer slots and wedged them.
36. Insert PVC empire sleeves in the winding ends, remove the insulation and connect the coils in series according to the connection diagram recorded in table 1. Refer to related theory Ex. No. 1203.
37. Check the connections referring to the connection diagram atleast once.
38. Solder the end connections and pull the sleeves into position.
39. Connect the lead wires, solder them and insert the sleeves.
40. Bind the overhang and the end connections, with the help of a binding theread/tape similar to the orginal.
41. Shape the overhang usin a nylon hammer. Check the diamensions of the overhang at intervals to the see the overhang attains a shape as in the original winding so that the winding will not rub with the rotor.
42. Test the winding for insulation leakage,short circuit or open circuit if any, by a multimeter and Megger. Refer information sheet No. 1203.
43. Assemble the fan and run the fan for a few minutes. Refer to Table 1 for connections.
44. If found okay, dismantle the fan, preheat and impregnate the winding with varnish. Refer to Related Theory Ex. No. 1203.
45. After drying remove the excess varnish.
46. Reassemble the fan and test the fan for its performance atleast for 8 hours.
47. Check the direction of rotation. The direction of rotation of the fan when viewed from the bottom should be anticlockwise and when viewed from the top it should be clockwise.
48. If found incorrect, change the connections of either the starting or running winding.
49. Use a nylon hammer and shape the overhang to the original size. Check the size of the overhang with the help of a overhang template.

Test the winding

Test the winding and note down the results. Follow the instructions contained in Skill information.

Test the motor

Test run the motor to ascertain its performance.

Tie the hemp thread to bind the soldered joint along with the overhang.

EXERCISE NO. 9

AIM

I. To wind the one phase coils for AC. Three phase 400/440 V, 24 slots, 4 poles stator of squirrel cage induction motor in double layer diamond coil method.

RELATED INFORMATION

Three-phase induction motors are of tow types,

- Squirrel cage induction motor.
- Wound rotor or slip ring induction motor.

The squirrel cage induction motor mainly consists of a stator rotor with bearing on the shaft and end plates to support the rotor bearing at either end of the stator. The stator has an external enclosure of cast iron or cast steel holding a stack made of circular silicon steel stampings with slots cut in the inner periphery. The stack is held inside the bore of the enclosure tightly. Stator winding is housed in the insulated slots of the stator and the connections are taken out to the terminal plate. The rotor is a stack of silicon steel of circular stampings secured on the shaft and have thick aluminium conductor passing through the semiclosed or closed slots and shortened with thick aluminium rings on either side in the cage rotor, and the wound rotor has winding in the insulated semiclosed slots on the outer periphery. The connections are made to three slip-rings mounted on the shaft, but insulated from it.

OPERATION

When 3-phase stator winding is connected to the source, the stator produces a rotating magnetic field. This field induces voltage in the rotor conductors which results in the flow of heavy current in shortened conductors.

The magnetic field due to the rotor current interacts with the stator field, and the rotor experiences a torque and rotates in the same direction as the main field. As no supply is given to the rotor, its voltage and resultant current is due to mutual induction. Hence the motor is known

as induction motor. The stator field rotate at a synchronous speed which is = $\frac{2f \times 60}{\text{No. of Poles}}$

i.e. of two poles machine $= \frac{2 \times 50 \times 60}{2}$

$= 3000$ rpm at 50 Hz

Rotor speed is less than synchronous speed and this difference is known as slip and expressed as % of synchronous speed.

$$\text{Slip} = \frac{NS - NR}{NS}$$

$$= \frac{3000 - 2800}{3000}$$

$$= \frac{200 - 0.06 \text{ or } 6\%}{3000}$$

Where actual r.p.m. NR = 2800

Synchronous r.p.m. NS = 3000

WINDING

Stator winding can be single layer where each slot has only one coil side number, the number of coils being half the number of the slots. Double layer has as many coils as the number of slots and each slot has two sides of two different coils.

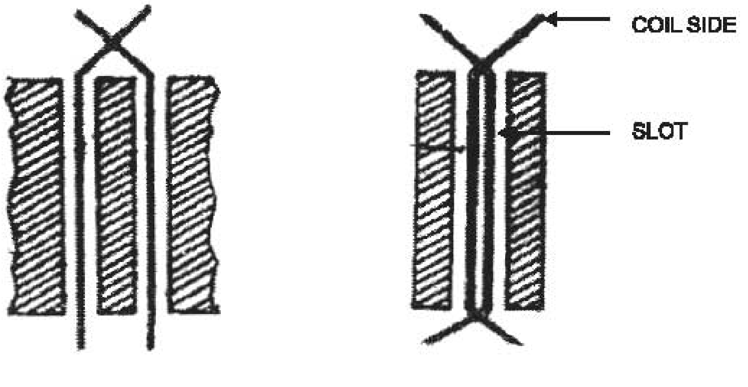

(A) SINGLE LAYER (B) DOUBLE LAYER

The entire stator slots are equally divided for 3 phases and for a number of poles. A 24 slot stator, wound for 4 poles, will have :

$$\text{No. of slots/phases} = \frac{24}{3} = 8$$

$$\text{No. of slots per phases per poles} = \frac{24}{3 \times 4} = 2$$

WINDING PITCH

A full pitch coil has its 2 sides 180° apart. A coil group may have two, three or more number of coils connected in series for one pole in the winding. When all the coils are of the same size in the group they are inserted one in each slot with the same pitch, i.e. 1® 6, 2 ® 7, 3 ® 8 and so on. Such winding is known as progressive chain winding. But when a group has two, three or more coils positioned one inside the other, they will have different pitches, i.e. 1 ® 8, 2 ® 7, 3 6 and are known as concentric coils or winding.

In a three – phase winding, the winding is desplaced 120° (electrical) apart. The stat of three phases must be 120° apart and so will be the ends.

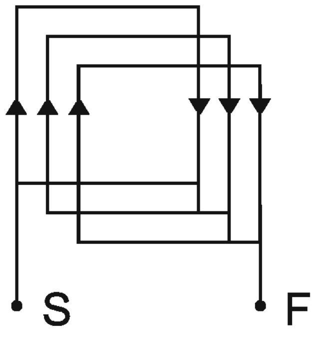

(a) PROGRESSIVE COIL

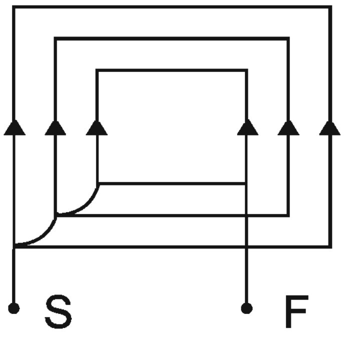

(b) CONCENTRIC COIL

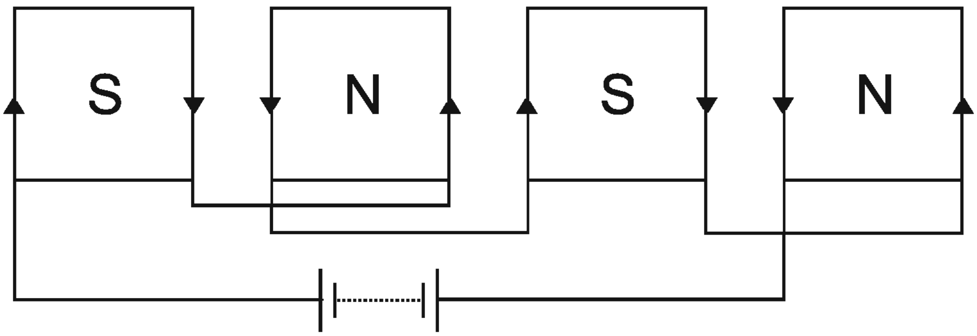

Interconnection of the coils of a four-pole induction motor

WINDING CONNECTIONS

Coils or coil groups for each phase are connected in such a way that they produce alternate north and south poles.

EQUIPMENT AND MATERIALS

Sl. No.	Item	Size	Quantity
1	Insulated combination pliers	20cm	1
2	Insulated wire cutter	20cm	1
3	Insulated screw driver	20cm	1
4	Insulated screw driver	15cm	1
5	Knife	15cm	1
6	Ball pein hammer	250 gms	1
7	Micro meter 0.25 mm		1
8	D.E. spanner set metric		1 set
9	Soldering iron 35/75 watt	230 volts	1 each
10	Megger 50 volts		1
11	Ammeter 0-10 amp	Moving iron	1
12	Volt meter 0-500 volts	Moving iron	1
13	Series test lamp		
14	Super enamelled wire size/quantity can be calculated after dismantling the defective coil of the motor		
15	Cotton tape 20mm in breadh		
16	Leatheroid paper 5 mills/10 mills		
17	Empire Sleeves 2mm 4mm		
18	Bamboo strip (used for making wedges for slots)		
19	Insulating varnish		
20	Binding thread		
21	solder flux		
22	Solder paste		

Serial No.	Horse Power	RPM
Voltage	Current	Frequency
Insulation	Rating	Connections

PROCEDURE

- ★ Mark the position of the end plates with respect to the body with the centre punch marks.
- ★ Prepare a repair card for the motor with the information from the rating plate e.g.
- ★ Dismantle the motor, remove the rotor and inspect the winding.
- ★ Note the length of the over-hang in the stator on either side, and measure the inside and outside diameter of the winding head and record on the card.
- ★ Expose the connections, note, and check the inter-coil connections.
- ★ Check the coil pitch, the type of the winding and the number of coils in each set and note.
- ★ Cut the winding, clean the stator, note the number of turns in each coil and the size of the wire.
- ★ Thoroughly clean the stator, blow out with compressed air or wash in dilute solution of caustic soda, rinse in water and dry in oven.
- ★ Insulate the stator slots with suitable insulating material.
- ★ Make wooden former, wind coil with the original size of wire and number of turns.
- ★ Insert the coils in the slots to the noted winding pitch, close the slots with the slot covers and wedges.
- ★ Shape the winding, and connect each phase coils by soldering with resin-cored solder and slide sleeve on the joints.
- ★ Tie the winding head after inserting the inter-phase insulation with thread or cotton tape.
- ★ Check the polarity with a compass by connecting low voltage D.C. for each phase.
- ★ Assemble the motor, check insulation of each phase with respect to phase and earth.
- ★ Connect the motor to 3-phase supply and check the current drawn by each phase and note if balanced.
- ★ Dry the stator in oven, varnish and bake in oven for 10 hrs. at 85°C to 100°C.
- ★ Clean the stator, assemble the motor, make connections to the terminal plate and test for functional test.

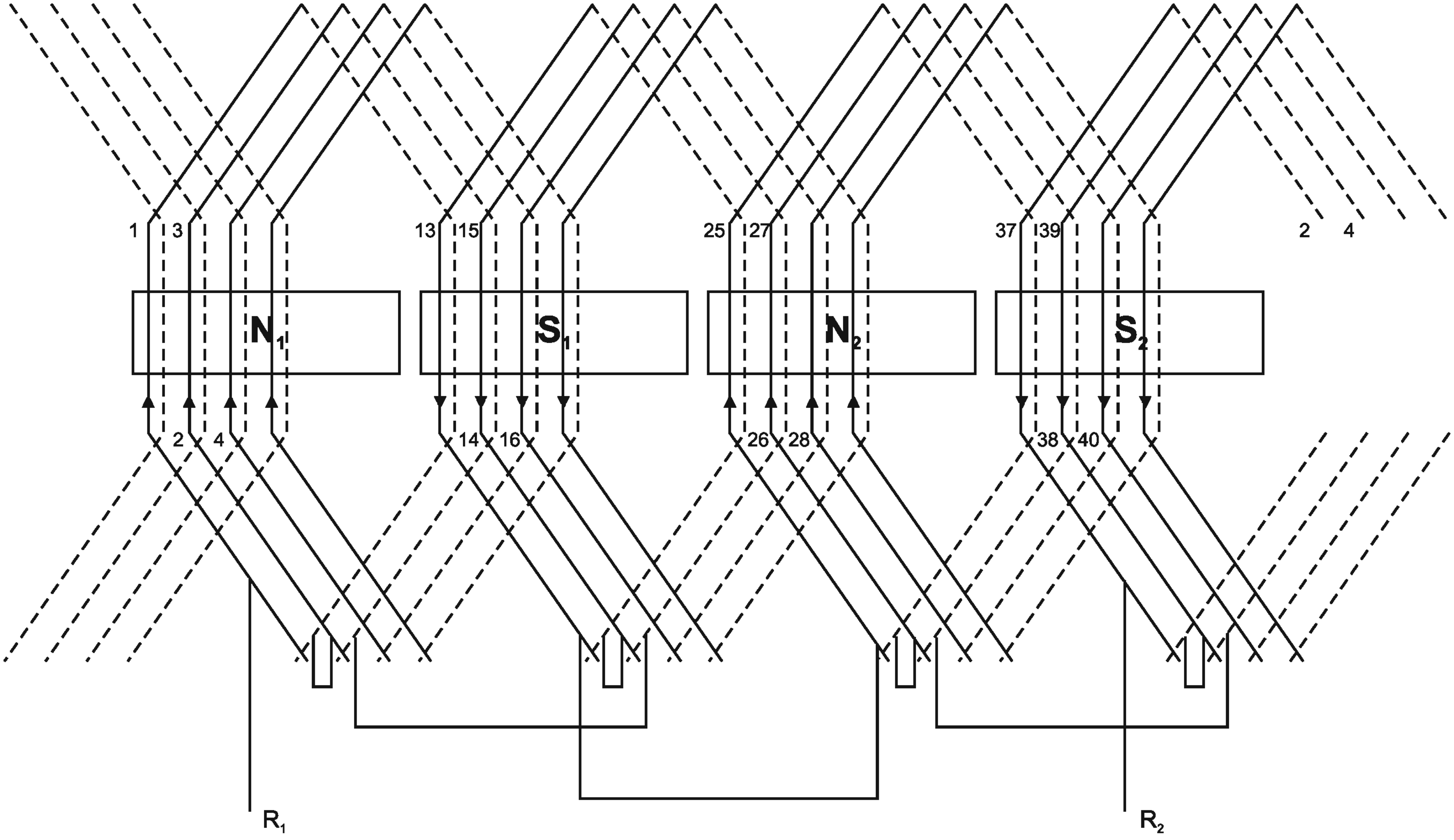

AC 24 Slots 4 pole R Phase Coil Developed winding diagram

TABULAR RECORD FOR TREE-PHASE SIX-POLE MOTOR

Stator mech deg	**360°**	**Span of full pitch**	**180°**	**No of coils No of slots**	**36**
Elect degrees	$360 \times \frac{6}{2}$	winding pitch	$1 \rightarrow 6$	No of coils per phase	$\frac{36}{3} = 12$
No. of slots	36	Phase displacement	120°	No of coils per pole	$\frac{12}{6} = 2$
Degrees per slot	$\frac{360}{36} \times \frac{6}{2} = 30$	Starts of Phases	Slot no. 1, 5 & 9	Coils / group	2

PRECAUTIONS

- ★ While inserting coils take care not to scratch the wire enamel insulation.
- ★ Insert few turns at a time and see that they lie straight inside without kinks.
- ★ Keep the start of all the coils/coil groups on one side and ends on the other side for easy identification.

EXERCISE NO. 10

AIM

1) To insert the already wound one phase coils for AC, 3 phase, 400/440V, 24 Slots, 4 Poles stator of squirrel cage induction motor in double layer method.

2) To connect the end connection and conduct the earth test and continuity test.

REQUIREMENTS

TOOLS AND INSTRUMENTS

★	Electrician tool kit	-	1 Set
★	Double end spanner 5mm to 30mm	-	1 Set
★	Cold chisel 25mm dia. x 200mm long	-	1 No.
★	Nylon hammer 50mm dia. x 100mm	-	1 No.
★	Pulley puller 200mm with 3 jaws	-	1 No.
★	Outside micrometer 0-25mm	-	1 No.
★	Spring balance or weighing machine		
★	0-3kg having 10g resolution	-	1 No.
★	Steel rule 300mm	-	1 No.
★	Scissors 200mm	-	1 No.
★	Fibre or Hylam knife edge assorted sizes	-	4 Nos.
★	Soldering iron 60W, 240V	-	1 No.
★	Multimeter 20K ohms / Volt	-	1 No.
★	Megger (Insulation tester) 500V	-	1 No.
★	Ammeter MI (Multi-range) 0-5A, 10A	-	1 No.
★	Multi-range voltmeter M.I. 0-300V-500V	-	1 No.
★	Tachometer 0-500-5000 r.p.m	-	1 No.
★	Allen key 3mm to 12mm	-	1 Set.
★	Ready made stepped former universal size	-	1 Set.
★	Awl of required length and thickness	-	1 No.

EQUIPMENT / MACHINES

★	Burnt out 3-phase motor with double layer distributed winding of available capacity	-	1 No.

MATERIALS

★ Super -enamelled copper wire	-	as reqd.
★ Milinex paper or triplex paper size&qty	-	as reqd.
★ Fibre glass or empire sleeves 1mm,		
★ 2mm, 4mm, 6mm	-	as reqd.
★ Bamboo/fibre wedges	-	as reqd.
★ Used hacksaw blade 300mm x 12mm	-	2 Nos.
★ Painting brush 25mm	-	1 No.
★ Insulating varnish	-	1 litre.
★ Thinner	-	500 ml.
★ Hemp thread	-	1 roll.
★ Cotton tape 20mm or 25mm	-	1 roll.
★ Resin-core solder - tin 60% / 40%	-	100g.
★ Soldering flux	-	25g.

PROCEDURE

TASK1: RECORDING WINDING DATA AND STRIPPING THE WINDING

1. Record the name-plate details in Table-1.
2. Make punch marks on the end covers and yoke for easy reassembly.
3. Dismantle the motor by separating the pulley, bearing cap, fan etc. Remove the end covers and then the rotor by taking all the precautions.
4. Inspect the rotor and bearings for their condition. If found faulty, repair or replace them.

TABLE : 1

NAME-PLATE DETAILS OF INDUCTION MOTOR

Manufacturer .... Serial No. .... Frame ....

Output ....kw .... Phase .... Frequency .... Hz

Voltage .... V connection Y D .... current .... Amps

Speed .... r.p.m. Duty cycle .... insulation class

5. Record the available data in Table 2.

6. Identify the position of the connection lead side with respect to the terminal box and write down in Table 2.
7. Remove the connection leads from the terminal plate.
8. Use a thinner in the connection lead side to loosen the vamish and locate the end connections.
9. Identify the end connections and draw the end connection diagram in your record indicating the sequence.
10. Measure the overhang at both sides of the winding. Record in Table 2 and prepare the template.
11. Record the possible data at this stage in addition to number of slot coil pitch etc. and enter in Table 2.
12. Cut a few coils with help of cold chisel or side cutter at the opposite side of connection lead. (Normally load side).
13. Remove the coils from the stator slot by pulling the wires with pliers. If it is hard, heat them by a blowlamp, and then pull them out. Remove a few coils one by in a sequential order. Remove at least two coils without cutting so that they could be used for measurement.
14. Record the details of the existing slot insulation in Table 2.
15. Record the type and diameter of the winding wire as well as particulars of the end connection leads in Table 2.
16. Record the type of coil winding and number of coils in table 2.
17. Record the weight of one coil and also the total weight of all the coils in Table.

TASK 2 : THE WINDING CALCULATION AND THE DEVELOPED DIGRAM

For easy understanding of the steps a 24 slots, 24 coil, 4-pole, 3-phase motor is considered as an example. For the motor given as an example winding calculations are as under.

1. No. of coils / phase $= \dfrac{\text{Total No. of coils}}{\text{No.of phases}}$

$$= \frac{24}{3} = 8 \text{ coils}$$

2. No. of coils / phase / poles $= \dfrac{\text{Total No. of coils}}{\text{No.of phases} \times \text{No.of Poles}}$

$$= \frac{24}{3 \times 4} = 2 \text{ coils/phase/pole.}$$

3. Pole pitch $= \dfrac{\text{No. of Slots}}{\text{No.of Poles}} = \dfrac{24}{4} = 6$ slots / pole

4. Coil pitch possible
   A 5(1 to 6) Short chorded
   B 6 (1to 7) Full pitched
   C 7 (1to 8) Long chorded
5. Coil pitch selected = 5 (1to 6)
6. Coil pitch selected is short chorded.
7. Total electrical degrees = 180° x No. of poles
   = $180^\circ \times 4 = 720^\circ$
8. Slot distance in degree $= \dfrac{\text{Total electrical degree}}{\text{No. of slots}}$

   $= \dfrac{720}{24} = 30$

9. Reqd. displacement between phases in terms of slots $= \dfrac{120}{\text{Slot distance in degrees}}$

   $= \dfrac{120}{30} = 4$ slots

10. Winding sequcence
    If 1st phase starts in the 1st slot.
    2nd phase starts in the (1+4) i.e. in 5th slot.
    3rd phase starts in the (5+4) i.e. in 9th slot.

11. Arrangement of coils
    The coils are to be arranged in the slots in the sequence.
    1-6, 2-7, 3-8, 4-9, 5-10, 6-11, 7-12, 8-13, 9-14, 10-15
    11-16, 12-17, 13-18, 14-19, 15-20, 16-21, 17-22,
    18-23, 19-24, 20-1, 21-2, 22-3, 23-4, 24-5.

TABLE 2

DATA TO BE TAKEN FROM THE STATOR (before removing the coils)

No. of slots .... No. of coils .... Coils per group ....

Group connectors ....

Wire insulation ....

Coil throw .... Type of winding .... Distribution / concentric

Wedge material .... Size .... Binding material .... size ....

Overhang dimension Out dia. .... mm Inner dia .... mm

Length ....mm Shape .... (make template).

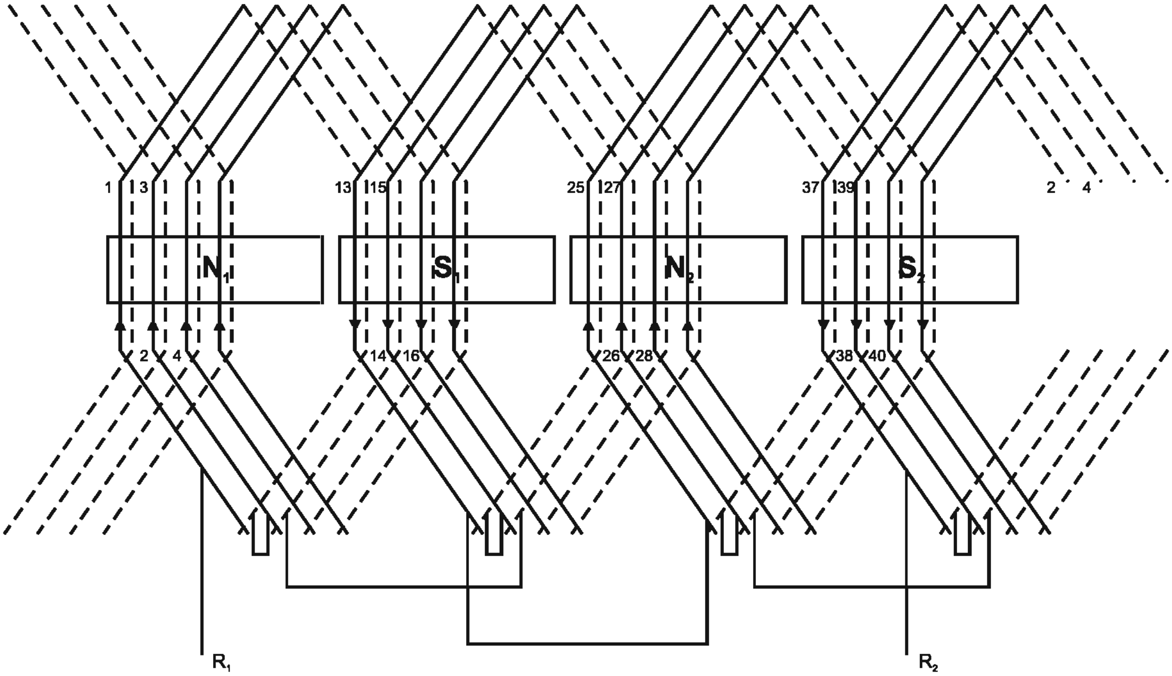

AC 24 Slots 4 pole R Phase Coil Developed winding diagram

DATA TO BE TAKEN (after removing the coils)

Size of wire ....mm No. of parallel wires .... No. of turns ....

Size of coil length .... mm (inside) width ....mm (inside) Thickness ....mm

Type of sleeve ...., ... size .... Type of lead .... size ....

1.

2.

3.

Slot insulation .... Type .... Thickness .... Dimension ....

Type of coil .... Number of coils ....

Weight of single coil .... Weight of the total winding

Front end bearing number .... Rear end bearing number ....

Size of connection lead ....

Connection lead side with respect of terminal box ....

1. No. of coils / phase $= \dfrac{\text{Total No. of Coils}}{\text{No. of Phases}}$

   = ... coils

2. No. of coils / phase / poles $= \dfrac{\text{Total No. of Coils}}{\text{No. of Phases} \times \text{No. of Poles}}$

   = ... slots/poles.

3. Pole pitch $= \dfrac{\text{Total No. of Slots}}{\text{No. of Poles}}$

   = ... slots / poles

4. Coil pitch possible A ....

   B ....

   C ....

5. Coil pitch as per the data collection is ....

6. Coil pitch selected is ....

   (short chorded/full pitched/ long chorded)

7. Total electrical degrees = 180° x No. of poles

   = 180° x .... = ...

8. Slot distance in degree $= \dfrac{\text{Total electrical degree}}{\text{No. of slots}}$

9. Reqd. displacement between phases in terms of slots $= \dfrac{120}{\text{Slot distance in degree}}$

10. Winding sequcence

    If 1st phase starts in the ....

    2nd phase starts in the ....

    3rd phase starts in the ....

11. Arrangement of coils

    The coils are to be arranged in the slots in the sequence.

    Draw the connection diagram and the developed diagram for the motor given to you, on a separate paper.

TASK 3 : PREPARING THE STATOR TO RECEIVE THE WINDING

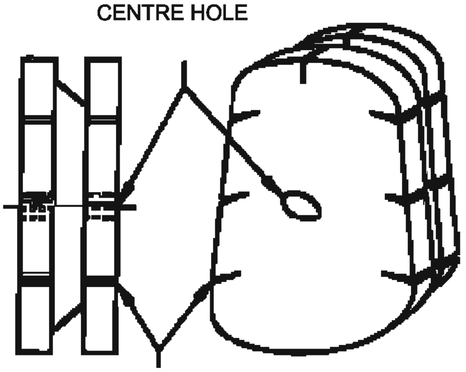

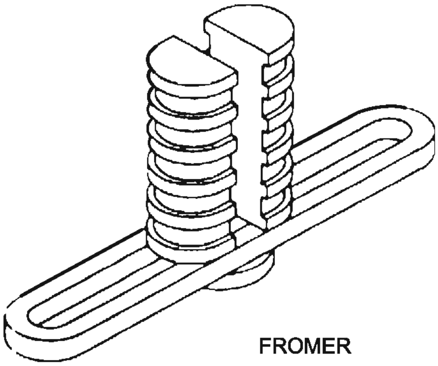

1. Set the core, if it if mangled (lightly tap with a nylon mallet to correct the core) and clean the slot to remove any old insulation paper.
2. Select the insulation paper of the same grade and thickness or its equivalent as in the original and cut the insulation paper to the same size. Slot insulation paper must be approximately 10 to 15mm longer than the slot length and is to be formed according to the shapes of the inner walls of the slot. The ends of the insulation are often cuffed to avoid the insulation paper from sliding of from its position.

TASK 4 : PREPARING COILS

1. Make a ganged former or select a readymade former according the old coil size as shown in figure 3 and 4.
2. Select the correct size of winding wire as per the data taken.
3. Attach the former to the windig machine, wind the designated turns and make one set of ganged coils.

4. Insert the ganged coils in the designated slots and check their correctness. While checking make sure that the coils are of the correct dimension so that the two coil sides could be accommodated as top and bottom coils sides in the same slot of the double layer winding, and the overhang dimensions are comparable to the template (as in the original).
5. If coils dimension are correct, make necessary sets of ganged coils. In the example given, two coils are forming the gang. Choose the former according to the number of gang coils.

TASK 5 : LAYING COILS IN DOUBLE LAYER WINDING

Carefully examine the developed diagram in which the slot pitch is given as 1-6 and there will be two coils in a group. The left coil side of coil 1 is in slot 1 as bottom coil and the right coil side of coil 1 is in slot 6 as top coil. In double layer winding the coil sides should be placed in adjacent slots. Modify the procedure to suit the requirement of the given motor winding.

1. Insert the left coil side of the first set to ganged coils in slots 1 and 2.
2. Leave the right coil sides of the ganged coils over the stator with a leatheroid insulation paper between the coils sides and core.
3. Likewise inset two more sets of ganged coils in slot numbers 3,4,5 and 6 as shown in Fig. 5.
4. Place a separator insulation over the bottom coils side of slot 6.
5. Now inser the right coil side of the 1st coil in slot number 6 as the top coil side.

TASK 6 : CONNECTION OF GROUP LEADS - TESTING AND VARNISHING

1. Bring out the group ends, connect, solder and insulate the groups as shown in Figure 6.
2. Connect the lead cables to the group connections and solder them.
3. Tie the hemp threads in the overhangs, to secure sleeved joints and phase separator insulations.
4. Shape the overhangs and check with a template.
5. Test the winding for continuity and ground.
6. Assemble the motor if the test results are satisfaction and run it for ten minutes.
7. If the results are O.K. dismantle the motor, imprenate the windings and dry them.
8. Assemble and test the motor on load.

EXERCISE NO. 11

AIM

To wind the one phase coils for AC three phase 400/440V, 36 Slots, 4 Poles stator of squirrel cage induction motor in single layer diamond coil method.

REQUIREMENTS

TOOLS AND INSTRUMENTS

★	Electrician tool kit	-	1 Set
★	Double end spanner 5mm to 30mm	-	1 Set
★	Cold chisel 25mm dia. x 200mm long	-	1 No.
★	Nylon hammer 50mm dia. x 100mm	-	1 No.
★	Pulley puller 200mm with 3 jaws	-	1 No.
★	Outside micrometer 0-25mm	-	1 No.
★	Spring balance or weighing machine		
★	0-3kg having 10g resolution	-	1 No.
★	Steel rule 300mm	-	1 No.
★	Scissors 200mm	-	1 No.
★	Fibre or Hylam knife edge assorted sizes	-	4 Nos.
★	Soldering iron 60W, 240V	-	1 No.
★	Multimeter 20K ohms / Volt	-	1 No.
★	Megger (Insulation tester) 500V	-	1 No.
★	Ammeter MI (Multi-range) 0-5A, 10A	-	1 No.
★	Multi-range voltmeter M.I. 0-300V-500V	-	1 No.
★	Tachometer 0-500-5000 r.p.m	-	1 No.
★	Allen key 3mm to 12mm	-	1 Set.
★	Ready made stepped former universal size	-	1 Set.
★	Awl of required length and thickness	-	1 No.

EQUIPMENT / MACHINES

★	Burnt out 3-phase motor with double layer distributed winding of available capacity	-	1 No.

MATERIALS

★ Super -enamelled copper wire	-	as reqd.
★ Milinex paper or triplex paper size&qty	-	as reqd.
★ Fibre glass or empire sleeves 1mm,		
★ 2mm, 4mm, 6mm	-	as reqd.
★ Bamboo/fibre wedges	-	as reqd.
★ Used hacksaw blade 300mm x 12mm	-	2 Nos.
★ Painting brush 25mm	-	1 No.
★ Insulating varnish	-	1 litre.
★ Thinner	-	500 ml.
★ Hemp thread	-	1 roll.
★ Cotton tape 20mm or 25mm	-	1 roll.
★ Resin-core solder - tin 60% / 40%	-	100g.
★ Soldering flux	-	25g.

PROCEDURE

TASK1: RECORDING WINDING DATA AND STRIPPING THE WINDING

1. Record the name-plate details in Table-1.
2. Make punch marks on the end covers and yoke for easy reassembly.
3. Dismantle the motor by separating the pulley, bearing cap, fan etc. Remove the end covers and then the rotor by taking all the precautions.
4. Inspect the rotor and bearings for their condition. If found faulty, repair or replace them.
5. Record the available data in Table 2.
6. Identify the position of the connection lead side with respect to the terminal box and write down in Table 2.
7. Remove the connection leads from the terminal plate.
8. Use a thinner in the connection lead side to loosen the vamish and locate the end connections.
9. Identify the end connections and draw the end connection diagram in your record indicating the sequence.
10. Measure the overhang at both sides of the winding. Record in Table 2 and prepare the template.

11. Record the possible data at this stage in addition to number of slot coil pitch etc. and enter in Table 2.

12. Cut a few coils with help of cold chisel or side cutter at the opposite side of connection lead. (Normally load side).

13. Remove the coils from the stator slot by pulling the wires with pliers. If it is hard, heat them by a blowlamp, and then pull them out. Remove a few coils one by in a sequential order. Remove at least two coils without cutting so that they could be used for measurement.

14. Record the details of the existing slot insulation in Table 2.

15. Record the type and diameter of the winding wire as well as particulars of the end connection leads in Table 2.

16. Record the type of coil winding

TABLE : 1

NAME-PLATE DETAILS OF INDUCTION MOTOR

Manufacturer .... Serial No. .... Frame ....

Output ....kw .... Phase .... Frequency .... Hz

Voltage .... V connection Y D .... current .... Amps

Speed .... r.p.m. Duty cycle .... insulation class

TASK 2 : THE WINDING CALCULATION AND THE DEVELOPED DIAGRAM

For easy understanding of the steps a 36 slots, 18 coil, 4-pole, 3-phase motor is considered as an example. For the motor given as an example winding calculations are as under.

1. Total No. of coils $= \frac{\text{slots}}{2} = \frac{36}{2}$ = 18 coils (single layer)

2. No. of coils / phase $= \frac{\text{Total No. of coils}}{\text{No.of Phase}} = \frac{18}{3}$ = 6 coils

3. No. of coils / phase / poles $= \frac{\text{Total No. of coils}}{\text{No.of Phase} \times \text{No. of Poles}} = \frac{18}{3 \times 4}$ = 1.5

3. Pole pitch = $\frac{\text{No. of slots}}{\text{No.of Poles}} = \frac{36}{4}$ = 9 slots / pole

4. Coil pitch possible = 1 to 10

R			Y			B		
1	-	10	4	-	13	7	-	16
2	-	11	5	-	14	8	-	17
3	-	12	6	-	15	9	-	18
19	-	28	22	-	31	25	-	34
20	-	29	23	-	32	26	-	35
21	-	30	24	-	33	27	-	36

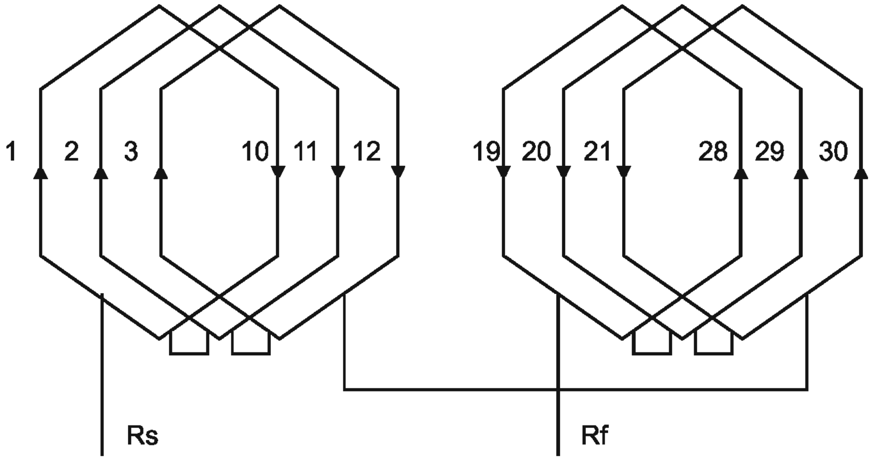

AC 36 Slots 4 Poles R Phase Developed Single Layer winding diagram

TABLE 2

DATA TO BE TAKEN FROM THE STATOR (before removing the coils)

No. of slots .... No. of coils .... Coils per group ....

Group connectors ....

Wire insulation ....

Coil throw .... Type of winding .... Distribution / concentric

Wedge material .... Size .... Binding material .... size ....

Overhang dimension Out dia. .... mm Inner dia .... mm

Length ....mm Shape .... (make template).

DATA TO BE TAKEN (after removing the coils)

Size of wire ....mm No. of parallel wires .... No. of turns ....

Size of coil length .... mm (inside) width ....mm (inside) Thickness ....mm

Type of sleeve ...., ... size .... Type of lead .... size ....

1.

2.

3.

Slot insulation .... Type .... Thickness .... Dimension ....

Type of coil .... Number of coils ....

Weight of single coil .... Weight of the total winding

Front end bearing number .... Rear end bearing number ....

Size of connection lead ....

Connection lead side with respect of terminal box ....

1. No. of coils / phase $= \dfrac{\text{Total No. of coils}}{\text{No.of Phase}}$

   = ... coils

2. No. of coils / phase / poles $= \dfrac{\text{Total No. of coils}}{\text{No.of Phase} \times \text{No. of Poles}}$

   = ... slots/poles.

3. Pole pitch $= \dfrac{\text{No. of slots}}{\text{No.of Poles}}$ = = ... slots / poles

4. Coil pitch possible

   A ....

   B ....

   C ....

5. Coil pitch as per the data collection is ....

6. Coil pitch selected is ....

   (short chorded/full pitched/ long chorded)

7. Total electrical degrees = 180° x No. of poles

   = 180° x .... = ...

8. Slot distance in degree $= \dfrac{\text{Total electrical degree}}{\text{No. of Slots}}$

9. Reqd. displacement between phases in terms of slots $= \dfrac{120}{\text{Slot distance in degree}}$

10. Winding sequcence

If 1st phase starts in the ....

2nd phase starts in the ....

3rd phase starts in the ....

11. Arrangement of coils

The coils are to be arranged in the slots in the sequence.

Draw the connection diagram and the developed diagram for the motor given to you, on a separate paper.

TASK 3 : PREPARING THE STATOR TO RECEIVE THE WINDING

1. Set the core, if it if mangled (lightly tap with a nylon mallet to correct the core) and clean the slot to remove any old insulation paper.
2. Select the insulation paper of the same grade and thickness or its equivalent as in the original and cut the insulation paper to the same size. Slot insulation paper must be ap proximately 10 to 15mm longer than the slot length and is to be formed according to the shapes of the inner walls of the slot. The ends of the insulation are often cuffed to avoid the insulation paper from sliding of from its position.

TASK 4 : PREPARING COILS

1. Make a ganged former or select a readymade former according the old coil size as shown in figure 3 and 4.
2. Select the correct size of winding wire as per the data taken.
3. Attach the former to the windig machine, wind the designated turns and make one set of ganged coils.

4. Insert the ganged coils in the designated slots and check their correctness. While checking make sure that the coils are of the correct dimension so that the two coil sides could be accommodated as top and bottom coils sides in the same slot of the double layer winding, and the overhang dimensions are comparable to the template (as in the original).
5. If coils dimension are correct, make necessary sets of ganged coils. In the example given, two coils are forming the gang. Choose the former according to the number of gang coils.

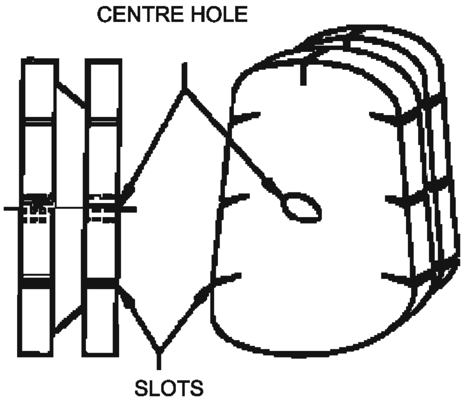

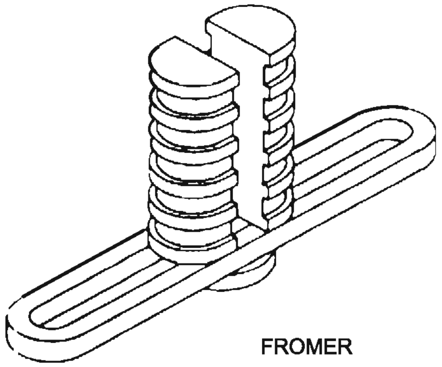

TASK 5 : CONNECTION OF GROUP LEADS - TESTING AND VARNISHING

1. Bring out the group ends, connect, solder and insulate the groups as shown in Figure 6.
2. Connect the lead cables to the group connections and solder them.
3. Tie the hemp threads in the overhangs, to secure sleeved joints and phase separator insulations.
4. Shape the overhangs and check with a template.
5. Test the winding for continuity and ground.
6. Assemble the motor if the test results are satisfaction and run it for ten minutes.
7. If the results are O.K. dismantle the motor, imprenate the windings and dry them.
8. Assemble and test the motor on load.

EXERCISE NO. 12

AIM

1) To insert the alread wound one phase coils for AC, 3 phase 400/440V, 36 slots, 4 poles stator of squirrel cage induction motor in single layer method.
2) To connect the end connections and conduct the earth test and continuity test.

REQUIREMENTS

TOOLS AND INSTRUMENTS

★ Electrician tool kit	-	1 Set
★ Double end spanner 5mm to 30mm	-	1 Set
★ Cold chisel 25mm dia. x 200mm long	-	1 No.
★ Nylon hammer 50mm dia. x 100mm	-	1 No.
★ Pulley puller 200mm with 3 jaws	-	1 No.
★ Outside micrometer 0-25mm	-	1 No.
★ Spring balance or weighing machine		
★ 0-3kg having 10g resolution	-	1 No.
★ Steel rule 300mm	-	1 No.
★ Scissors 200mm	-	1 No.
★ Fibre or Hylam knife edge assorted sizes	-	4 Nos.
★ Soldering iron 60W, 240V	-	1 No.
★ Multimeter 20K ohms / Volt	-	1 No.
★ Megger (Insulation tester) 500V	-	1 No.
★ Ammeter MI (Multi-range) 0-5A, 10A	-	1 No.
★ Multi-range voltmeter M.I. 0-300V-500V	-	1 No.
★ Tachometer 0-500-5000 r.p.m	-	1 No.
★ Allen key 3mm to 12mm	-	1 Set.
★ Ready made stepped former universal size	-	1 Set.
★ Awl of required length and thickness	-	1 No.

EQUIPMENT / MACHINES

★ Burnt out 3-phase motor with double layer distributed winding of available capacity	-	1 No.

MATERIALS

★ Super -enamelled copper wire	-	as reqd.
★ Milinex paper or triplex paper size&qty	-	as reqd.
★ Fibre glass or empire sleeves 1mm,		
★ 2mm, 4mm, 6mm	-	as reqd.
★ Bamboo/fibre wedges	-	as reqd.
★ Used hacksaw blade 300mm x 12mm	-	2 Nos.
★ Painting brush 25mm	-	1 No.
★ Insulating varnish	-	1 litre.
★ Thinner	-	500 ml.
★ Hemp thread	-	1 roll.
★ Cotton tape 20mm or 25mm	-	1 roll.
★ Resin-core solder - tin 60% / 40%	-	100g.
★ Soldering flux	-	25g.

PROCEDURE

TASK1: RECORDING WINDING DATA AND STRIPPING THE WINDING

1. Record the name-plate details in Table-1.
2. Make punch marks on the end covers and yoke for easy reassembly.
3. Dismantle the motor by separating the pulley, bearing cap, fan etc. Remove the end covers and then the rotor by taking all the precautions.
4. Inspect the rotor and bearings for their condition. If found faulty, repair or replace them.
5. Record the available data in Table 2.
6. Identify the position of the connection lead side with respect to the terminal box and write down in Table 2.
7. Remove the connection leads from the terminal plate.
8. Use a thinner in the connection lead side to loosen the vamish and locate the end connections.
9. Identify the end connections and draw the end connection diagram in your record indicating the sequence.
10. Measure the overhang at both sides of the winding. Record in Table 2 and prepare the template.

11. Record the possible data at this stage in addition to number of slot coil pitch etc. and enter in Table 2.
12. Cut a few coils with help of cold chisel or side cutter at the opposite side of connection lead. (Normally load side).
13. Remove the coils from the stator slot by pulling the wires with pliers. If it is hard, heat them by a blowlamp, and then pull them out. Remove a few coils one by in a sequential order. Remove at least two coils without cutting so that they could be used for measurement.
14. Record the details of the existing slot insulation in Table 2.
15. Record the type and diameter of the winding wire as well as particulars of the end connection leads in Table 2.
16. Record the type of coil winding

TABLE : 1

NAME-PLATE DETAILS OF INDUCTION MOTOR

Manufacturer .... Serial No. .... Frame ....

Output ....kw .... Phase .... Frequency .... Hz

Voltage .... V connection Y D .... current .... Amps

Speed .... r.p.m. Duty cycle .... insulation class

TASK 2 : THE WINDING CALCULATION AND THE DEVELOPED DIAGRAM

For easy understanding of the steps a 36 slots, 18 coil, 4-pole, 3-phase motor is considered as an example. For the motor given as an example winding calculations are as under.

1. Total No. of coils $= \dfrac{\text{slots}}{2} = \dfrac{36}{2}$ = 18 coils (single layer)

2. No. of coils / phase $= \dfrac{\text{Total No. of coils}}{\text{No.of Phase}} = \dfrac{18}{3}$ = 6 coils

3. No. of coils / phase / poles $= \dfrac{\text{Total No. of coils}}{\text{No.of Phase} \times \text{No. of Poles}} = \dfrac{18}{3 \times 4}$ = 1.5

3. Pole pitch = $\frac{\text{No. of slots}}{\text{No.of Poles}} = \frac{36}{4}$ = 9 slots / pole

4. Coil pitch possible = 1 to 10

R	Y	B
1 - 10	4 - 13	7 - 16
2 - 11	5 - 14	8 - 17
3 - 12	6 - 15	9 - 18
19 - 28	22 - 31	25 - 34
20 - 29	23 - 32	26 - 35
21 - 30	24 - 33	27 - 36

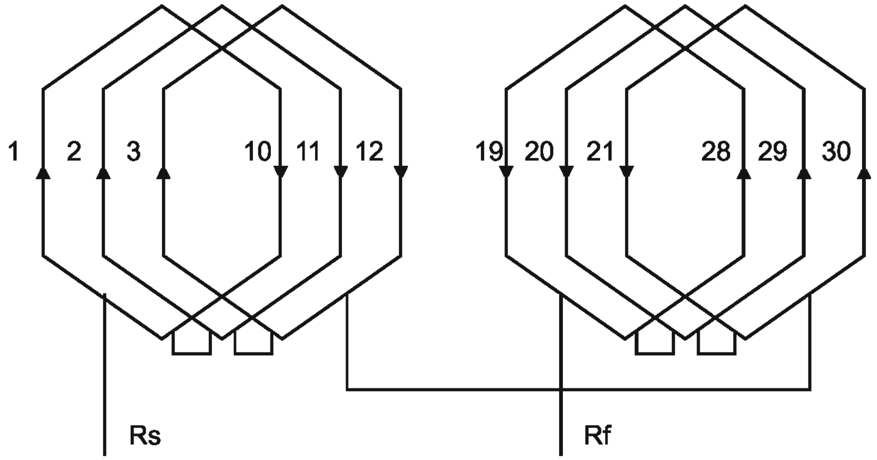

AC 36 Slots 4 Poles R Phase Developed Single Layer winding diagram

TABLE 2

DATA TO BE TAKEN FROM THE STATOR (before removing the coils)

No. of slots .... No. of coils .... Coils per group ....

Group connectors ....

Wire insulation ....

Coil throw .... Type of winding .... Distribution / concentric

Wedge material .... Size .... Binding material .... size ....

Overhang dimension Out dia. .... mm Inner dia .... mm

Length ....mm Shape .... (make template).

DATA TO BE TAKEN (after removing the coils)

Size of wire ....mm No. of parallel wires .... No. of turns ....

Size of coil length .... mm (inside) width ....mm (inside) Thickness ....mm

Type of sleeve ...., ... size .... Type of lead .... size ....

1.

2.

3.

Slot insulation .... Type .... Thickness .... Dimension ....

Type of coil .... Number of coils ....

Weight of single coil .... Weight of the total winding

Front end bearing number .... Rear end bearing number ....

Size of connection lead ....

Connection lead side with respect of terminal box ....

1. No. of coils / phase $= \dfrac{\text{Total No. of coils}}{\text{No.of Phase}}$

   = ... coils

2. No. of coils / phase / poles $= \dfrac{\text{Total No. of coils}}{\text{No.of Phase} \times \text{No. of Poles}}$

   = ... slots/poles.

3. Pole pitch $= \dfrac{\text{No. of slots}}{\text{No.of Poles}}$ = = ... slots / poles

4. Coil pitch possible

   A ....

   B ....

   C ....

5. Coil pitch as per the data collection is ....

6. Coil pitch selected is ....

   (short chorded/full pitched/ long chorded)

7. Total electrical degrees = 180° x No. of poles

   = 180° x .... = ...

8. Slot distance in degree $= \dfrac{\text{Total electrical degree}}{\text{No. of Slots}}$

9. Reqd. displacement between phases in terms of slots $= \dfrac{120}{\text{Slot distance in degree}}$

10. Winding sequcence

If 1st phase starts in the ....

2nd phase starts in the ....

3rd phase starts in the ....

11. Arrangement of coils

The coils are to be arranged in the slots in the sequence.

Draw the connection diagram and the developed diagram for the motor given to you, on a separate paper.

TASK 3 : PREPARING THE STATOR TO RECEIVE THE WINDING

1. Set the core, if it if mangled (lightly tap with a nylon mallet to correct the core) and clean the slot to remove any old insulation paper.
2. Select the insulation paper of the same grade and thickness or its equivalent as in the original and cut the insulation paper to the same size. Slot insulation paper must be ap proximately 10 to 15mm longer than the slot length and is to be formed according to the shapes of the inner walls of the slot. The ends of the insulation are often cuffed to avoid the insulation paper from sliding of from its position.

TASK 4 : PREPARING COILS

1. Make a ganged former or select a readymade former according the old coil size as shown in figure 3 and 4.
2. Select the correct size of winding wire as per the data taken.
3. Attach the former to the windig machine, wind the designated turns and make one set of ganged coils.

4. Insert the ganged coils in the designated slots and check their correctness. While checking make sure that the coils are of the correct dimension so that the two coil sides could be accommodated as top and bottom coils sides in the same slot of the double layer winding, and the overhang dimensions are comparable to the template (as in the original).
5. If coils dimension are correct, make necessary sets of ganged coils. In the example given, two coils are forming the gang. Choose the former according to the number of gang coils.

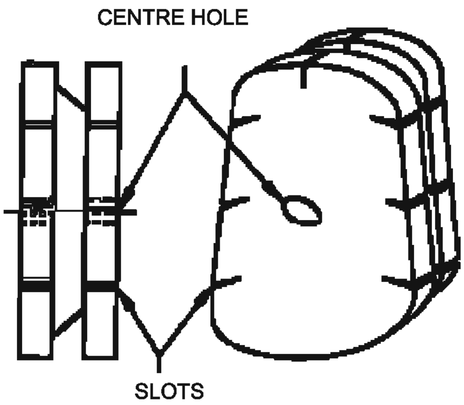

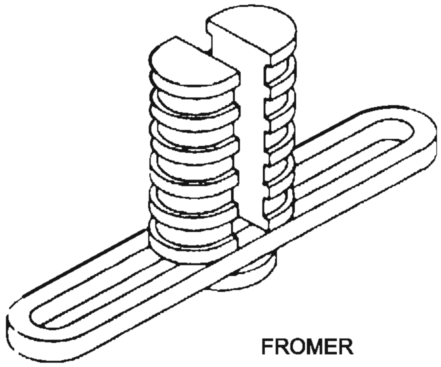

TASK 5 : CONNECTION OF GROUP LEADS - TESTING AND VARNISHING

1. Bring out the group ends, connect, solder and insulate the groups as shown in Figure 6.
2. Connect the lead cables to the group connections and solder them.
3. Tie the hemp threads in the overhangs, to secure sleeved joints and phase separator insulations.
4. Shape the overhangs and check with a template.
5. Test the winding for continuity and ground.
6. Assemble the motor if the test results are satisfaction and run it for ten minutes.
7. If the results are O.K. dismantle the motor, imprenate the windings and dry them.
8. Assemble and test the motor on load.

EXERCISE NO. 13

AIM

1) To required the given D.C. armature in simplex lap winding.
2) To conduct the earth test, continuity test and commutator segment bases short circuit test

.

RELATED INFORMATION

Armature winding is a very important element of a machine, as it directly takes part in the conversion of energy from one form into another. An important feature to remember about all D.C. armature windings is that they form close circuits. The joint between any two coils occurs where the start of one and the finish of the other is connected to the same commutator bar. In D.C. winding the elements lying at the top of the slots are given odd numbers and those at the bottom are given even numbers.

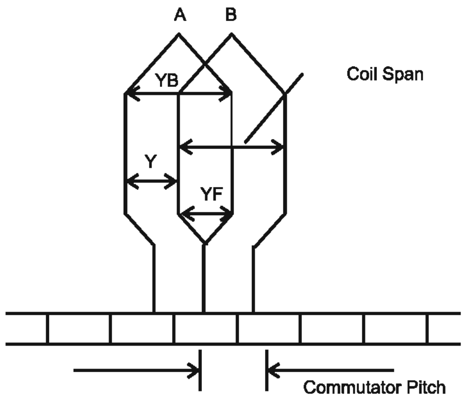

There are two types of D.C. armature winding:

- Lap winding
- Wave winding

In lap winding the adjacent ends of the coils are connected together or closed to each other on the commutator segments. The coils of such windings lap over each other from which the winding has derived its name.

There are as many paths of winding as there are field poles in the machines. Lap winding is classified in three ways:

- Simplex winding
- Duplex winding
- Triplex winding

In D.C. armature the following various terms are used.

POLE PITCH

It is the distance between the centre of one pole and that of the adjacent pole. This distance is measured in terms of slots or conductors. In terms of slots,

$$\text{Pole Pitch} = \frac{\text{No. of Slots}}{\text{No. of Poles}}$$

In terms of conductors

$$\text{Pole pitch} = \frac{\text{No. of Conductors}}{\text{No. of Poles}}$$

COIL SPAN

All coils have two sides. Each of them fits into a different slot according to the pole pitch. The distance between two sides is called coil spans or throw of coil.

$$\text{Coil Span} = \frac{\text{No. of Slots}}{\text{No. of Poles}}$$

WHOLE PITCH AND CHORD WINDING

When the coils span exactly matches the pole pitch, the winding is termed as whole pitch or full pitch; when slightly less, it is known as short chord (Short Pitch); and when slightly more, it is called long chord (Long Pitch) winding.

FRONT PITCH

The distance between the bottom of the first coil and the top of the second coil is called front pitch and is denoted by YF as shown in Figure.

BACK PITCH

The length of the end connection at the back measured in term of armature conductor is called back pitch and is denoted by YB as shown in Figure.

RESULTANT PITCH

The distance between two adjacent coils is known as Resultant Pitch and is denoted by

In Lap winding $y = Y_b - Y_f$

In wave winding $y = Y_f + Y_b$

COMMUTATOR PITCH

The space between the centre of one segment to the centre of the second segment is called Commutator Pitch and is denoted by Yc.

In lap winding Yc is unity.

In wave winding Yc $= \dfrac{\text{No. of segments}}{\text{No. of pair of Poles}} \pm 1$

PROGRESSIVE WINDING

In this winding the coil ends do not cross each other.

RETROGRESSIVE WINDING

It is that winding in which the top and bottom leads cross each other and develop a winding diagram. Calculation of the data available for D.C. lap winding:

No. of slots	=	12
No. of coils	=	12
No. of segments	=	12
No. of poles	=	2
No. of conductor	=	No. of Coils x 2 = 12 x 2 = 24

Pole Pitch $= \dfrac{\text{No. of slots}}{\text{Poles}} = \dfrac{12}{2} = 6$

WINDING

Coil No.	Slot No.		Segment No.	
	From	To	Top lead	Bottom Lead
1	1	7	1	2
2	2	8	2	3
3	3	9	3	4
4	4	10	4	5
5	5	11	5	6
6	6	12	6	7
7	7	1	7	8
8	8	2	8	9
9	9	3	9	10
10	10	4	10	11
11	11	5	11	12
12	12	6	12	1

EQUIPMENT AND MATERIALS

Sl. No.	Item	Quantity
1	Insulated screw driver 20 cms	1
2	Insulated screw driver 15 cms	1
3	Insulated combination pliers 20 cms	1
4	Wire cutter 20 cms	1
5	Scissors 20 cms	1
6	Knife 15 cms	1
7	Hammer ball pein ½ kg	1
8	Soldering iron 230V, 75 watts	1
9	Series test lamp	1
10	Growler	1
11	Enamelled wire/SCC/DCC wire	
12	Letheroid paper 5 mills 10 mills	
13	Cotton tape 20 mills	
14	Binding thread	
15	Bamboo strip	
16	Varnish	
17	Solder wire, solder paste	
18	Armature stand	
19	Wire gauge/micrometer	1

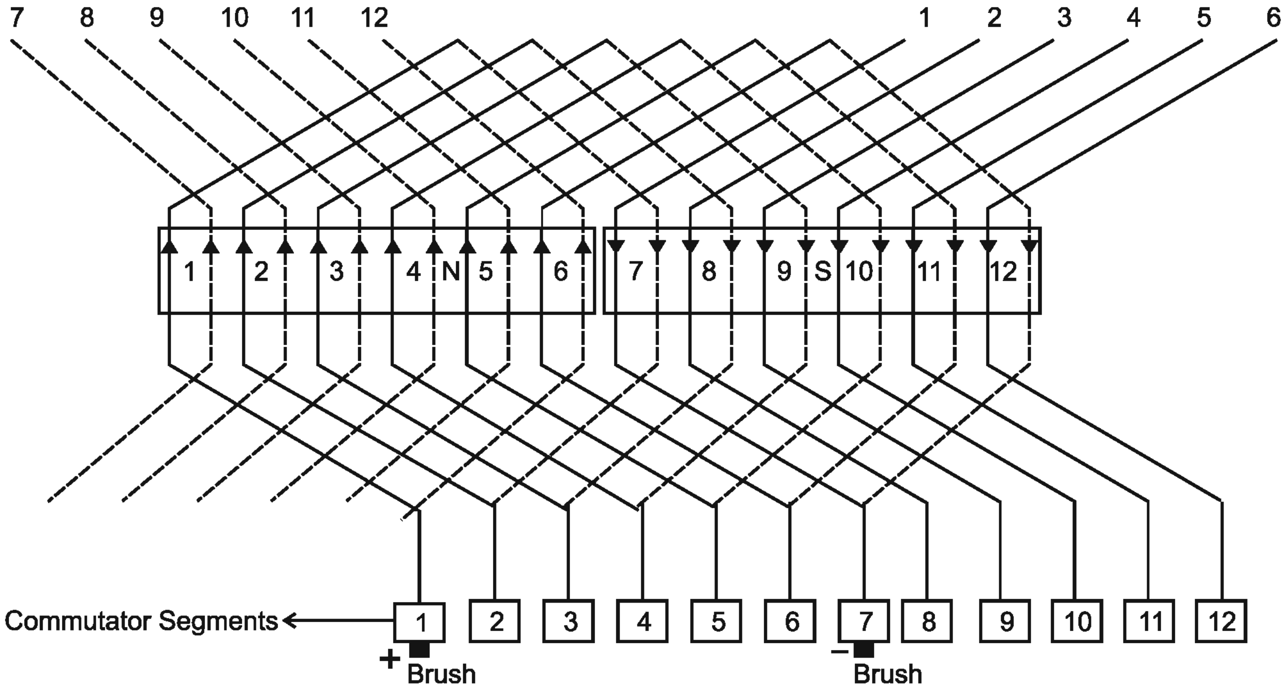

Double Layer Lap Winding diagram

PROCEDURE

★ Count the slots and commutator bars (segments).

★ Record and sketch the lead throw by making the slots and the commutator bars of a coil.

★ Record the coil throw (coil pitch).

★ Record the number of coils per slot and the type of winding, i.e. hand form, right hand, left hand, clock-wise, and soon.

★ Determine the size of the wire by means of wire gauge/micrometer.

★ Record the wire covering (insulation).

★ Unsolder the leads from the commutator, if the ends break off at the segments, use a hack saw particles of copper.

★ Remove the wedges from the slots.

★ Remove the coils from the slots.

★ Count the number of turns in each coil and determine size of the wire.

★ Preserve one coil in order to have the size to construct new coils.

★ Clean the armature, blow out with compressed air or wash in dilute water and dry it.

- ★ Insulate the slots with suitable insulating materials, and take the coil size.
- ★ Make a wooden patter, wind the coil with the original size of the wire and record the number of turns.
- ★ Insert the coil in the slots to the noted winding pitch, close the slots with the slot covers and wedges.
- ★ Strip the insulation from the ends of the wire and place the ends on the commutator bars are recorded.
- ★ Apply soldering flux over each wire in the commutator bar.

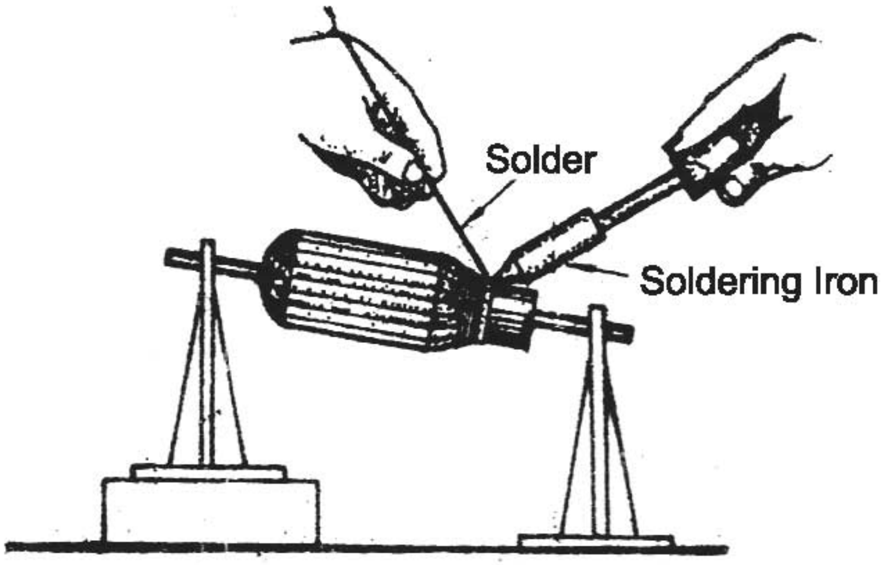

Soldering of commutator

- ★ Place the tip of the soldering iron on the commutator and wait unit the heat from the iron is transferred to the area of the commutator bar that is to be soldered.
- ★ Place solder wire on the commutator near the iron and allow it to melt and flow into the commutator bar before removing the iron (Figure).
- ★ Bind the armature with twine thread.
- ★ Test the winding for short circuits, grounds, open circuits and correctness of connections.
- ★ Varnish the armature and bake it.
- ★ After baking, again test the winding for short circuit grounds, open circuit grounds, open circuits.

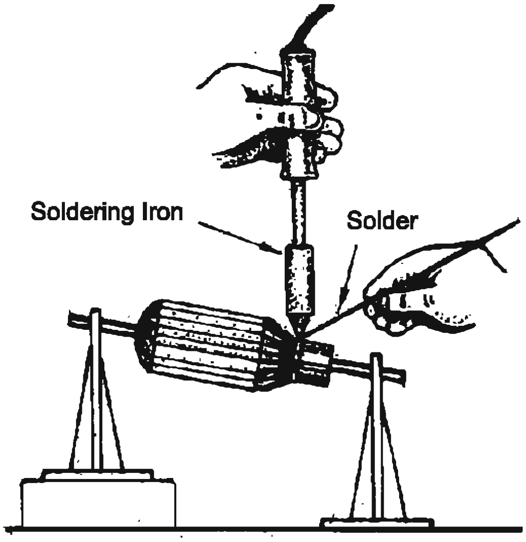

Soldering of commutator

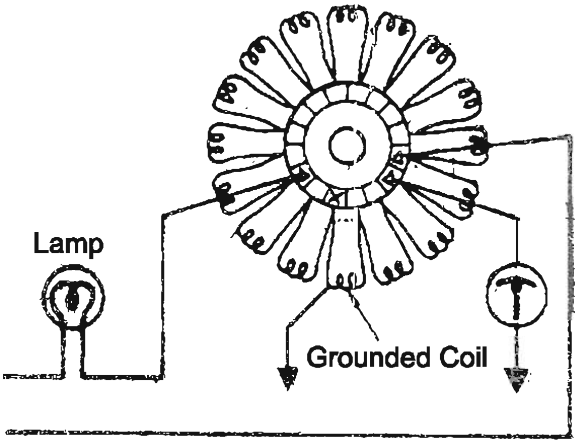

Ground test

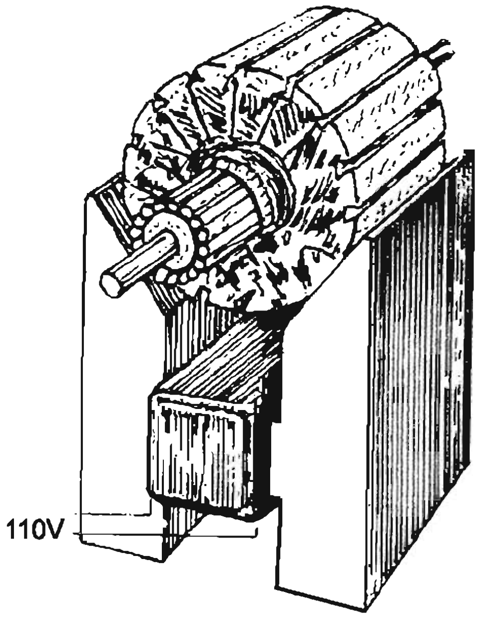

Growler Test

PRECAUTIONS

★ Do not disturb the laminations.

★ Before insulating the slots make sure that the old insulation is removed.

★ Solder should not flow from one segment to another.

★ The Growler test should be carried out after rewinding the armature.

★ Save your hand from the knife, and the soldering iron.

★ Avoid dry solder.

EXERCISE NO. 14

AIM

I. To rewind the given D.C. armature in simplex wave winding.

II. To conduct the earth test, continuity test and commutator segment bars short circuit test.

RELATED INFORMATION

Armature winding is a very important element of a machine, as it directly takes part in the conversion of energy from one form into another. An important feature to remember about all D.C. armature windings is that they form close circuits. The joint between any two coils occurs where the start of one and the finish of other is connected to the same commutator bar. In D.C. winding the elements lying at the top of the slots are given odd numbers and those at the bottom are given even numbers.

WAVE WINDING

In wave winding, the beginning and end points of a coil are connected to the commutator bars quite far apart. In a four-pole motor, they are connected on the opposite sides of the commutator. In a six-pole motor, they are connected to one-third of the commutator bars apart. In an eight-pole motor, they are connected to one-fourth of the bars apart.

A two-pole motor cannot be wave wound. The difference between wave winding and lap winding is in the position of the armature leads on the commutator.

Developed a diagram of a simplex double-layer wave winding as shown in Figure.

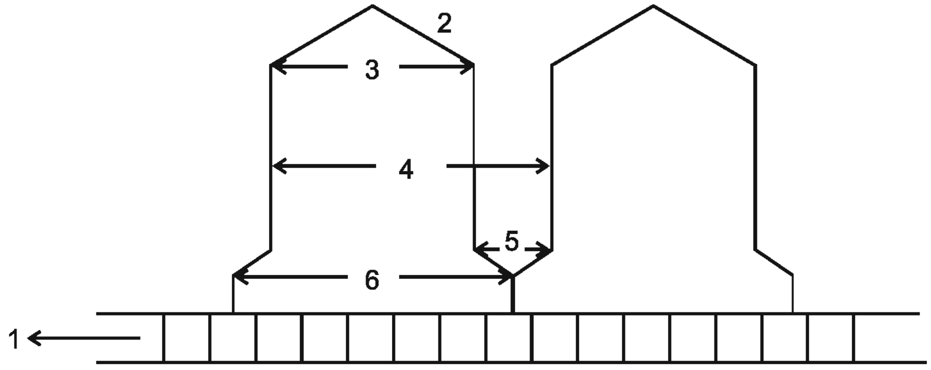

Commutator Segment

1. Commutator Segments
2. Coil
3. Coil Span (back Pitch Y_b)
4. Resultant pitch Y_R
5. Front Pitch Y_f
6. Commutator Pitch Y_c

EQUIPMENT AND MATERIALS

Sl. No.	Item and Size	Quantity
1	Insulated screw driver 20 cms	1
2	Insulated screw driver 15 cms	1
3	Insulated combination pliers 20 cms	1
4	Wire cutter 20 cms	1
5	Knife 15 cms	1
6	Hacksaw Blade 30 cm	1
7	Hammer ball pein ½ kg	1
8	Scissors 20 cm	1
9	Series test lamp	1
10	Growler	1
11	Enamelled wire/SCC/DCC	
12	Letheroid paper 5 mills, 10 mills	
13	Cotton tape 20 mm	
14	Binding thread	
15	Bamboo strip	
16	Varnish	
17	Solder wire, 80/20	
18	Solder Paste	
19	Armature stand	
20	Wiregauge/micrometer 0-25mm	1
21	Soldering iron 35/75 watt, 230 volts	1 each

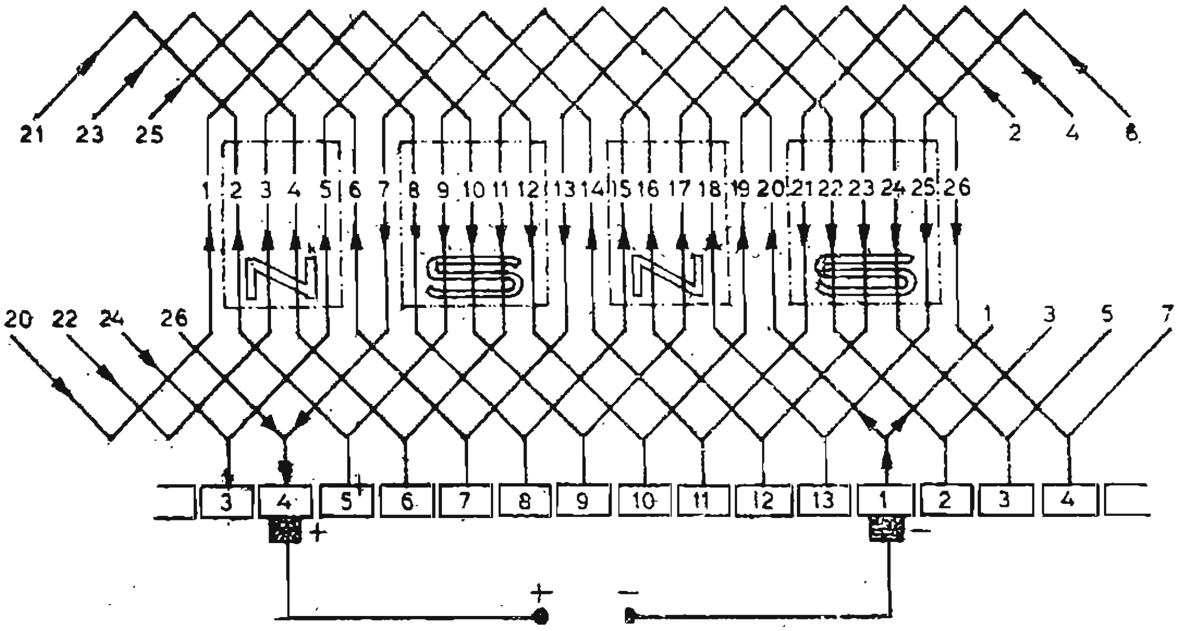

Simplex wave winding diagram

PROCEDURE

- ★ Count the slots and commutator segments.
- ★ Record and sketch the lead throw by marking the slots and the commutator bars of the coil.
- ★ Record the number of coils for slot and the type of winding, i.e. hand form, right hand or left hand, clockwise, and soon.
- ★ Record the coil throw (coil pitch).
- ★ Determine the size of the wire by means of wire gauge / micrometer.
- ★ Record the wire covering (insulation).
- ★ Unsolder the leads from the commutator bars. If the ends break off the segment, use a hacksaw blade to take out the broken particles of copper.
- ★ Remove the wedge form the slots.
- ★ Remove the coils from the slots.
- ★ Count the number of turns in each coil and find the size of the wire.
- ★ Preserve one coil in order to have the size and weight to construct a new coil.
- ★ Clean the armature, blow out with compressed air or wash in dilute solution of caustic soda, rinse in water and dry it.
- ★ Insulate the slots with suitable insulating material and take the coil size.

- ★ Make a wooden pattern wind the coil with the original size of wire and number of turns.
- ★ Insert the coil in the slots to the noted winding pitch, close the slots with the slots covers and wedges.
- ★ Strip off the insulation from the ends of the wire and place the ends on the commutator bars as recorded.
- ★ Apply soldering flux over each wire in the commutator bar.
- ★ Place the tip of the soldering iron on the commutator and wait till the heat from the iron is transferred to the area of the commutator bar that is to be soldered.
- ★ Place the solder wire on the commutator near the iron and allow it to melt and flow into the commutator bar before removing the iron.
- ★ Bind the armature with twine thread.
- ★ Test the winding for short circuit, ground, open circuit and correctness of connections.
- ★ Varnish the armature and bake it.
- ★ After baking, again the test the winding for short circuit, open circuit and ground.

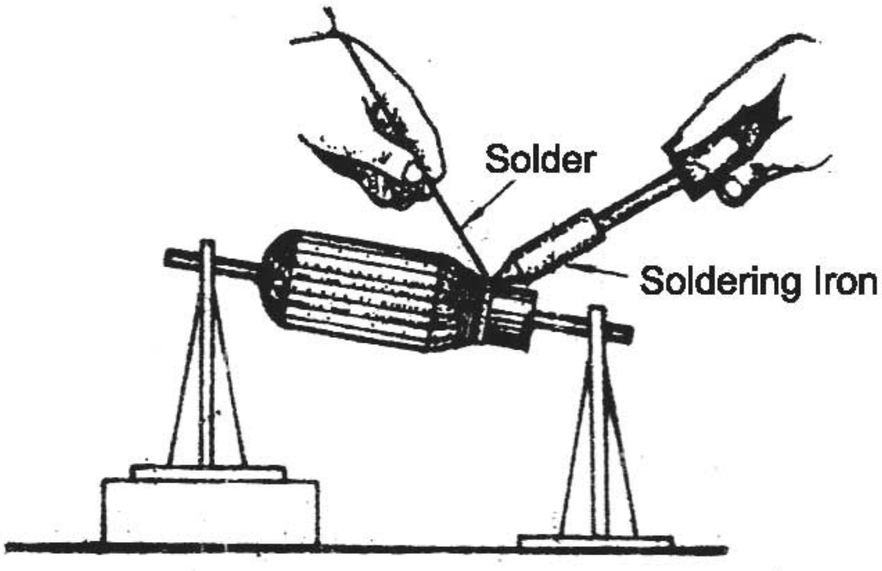

Soldering of commutator

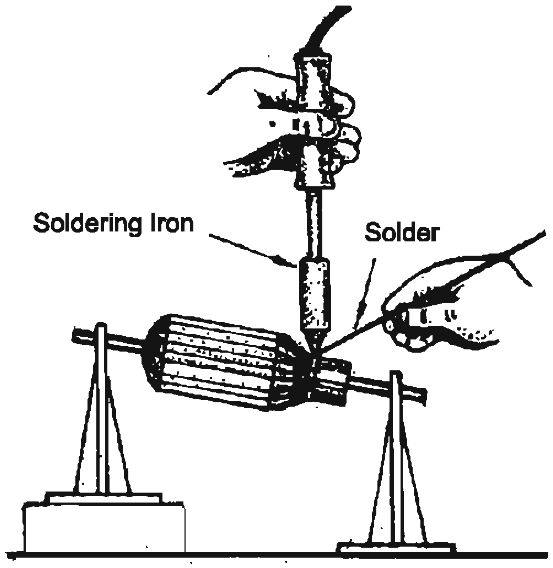

Soldering of commutator

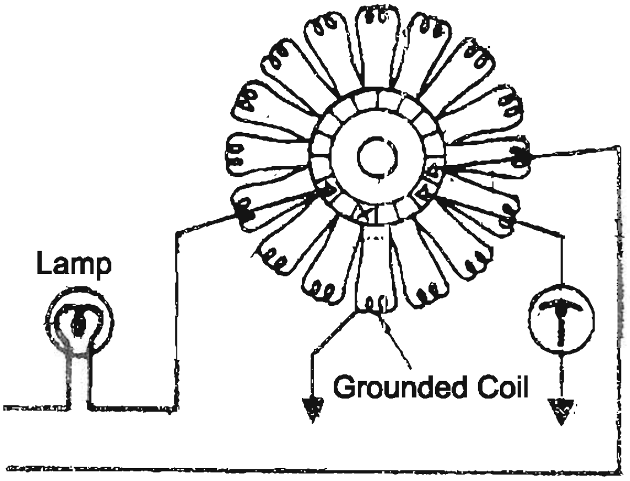

Ground test

PRECAUTIONS

- ★ Do not disturb the laminations.
- ★ Before insulating the slots, make sure that the old insulation is removed.
- ★ Solder should not flow from one segment to another.
- ★ The Growler test should be followed after rewinding the armature.
- ★ Save your hand from the knife, pliers, cutter, soldering iron, etc.
- ★ Avoid dry solder.

EXERCISE NO. 15

AIM

I. To dismantle the given AC, 3 phase 400/440v squirrel cage induction motor by proper tools .

II. To check the insulation resistance by using meggar.

III. To cheek the bearing and apply the quality grease in correct quantity.

IV. To assemble the motor and measure the air gap by feeler gauge.

EQUIPMENT AND MATERIALS

1.	Screwdriver 100, 150 and 200 mm	1 No each
2.	Spanner 5mm to 30 mm	1 set
3.	Ring spanner 5 mm to 30 mm	1 set
4.	Cold chisel 25 mm x 200 mm	1 No.
5.	Ball pein hammer 500 grams	1 No.
6.	Nylon hammer 75 mm x 100 mm	1 No.
7.	Pulley puller 200 mm wit h 3 jaws	1 No.
8.	Center punch 10 mm x 150 mm	1 No.
9.	Insulated cutting pliers 200 mm	1 No.
10.	Side cutter 150 mm	1 No.
11.	Micrometer outside 0-25 mm	1 No.
12.	Hacksaw frame 300 mm	1 No.
13.	Steel rule 300 mm	1 No.
14.	Scissors 200 mm	1 No.
15.	Fibre or Hylam knife of assorted sizes	4 Nos.
16.	Soldering iron 125 W, 230v	1 No.
17.	Knife 100 mm	1 No.
18.	Multimeter 20 K ohms / Volt	1 No.
19.	Megger (insulation tester) 500v	1 No.

Equipment/ Machines

1. A.C. 3 Phase 400/440V squirrel cage Indication Motor

Materials

Grease good quality	1 Box

TABLE 1

Induction motor name - plate details

Make.	Frame No.	Model ....
Phase	Kilo watt.	R.p.m. ....
Volts	Amperes	Frequency ....
Rating	Enclosure	Insulation ....
Connection	Star / Delta	Class

Remove the Shaft key or the grub screw holding the pulley as shown in Fig. 1.

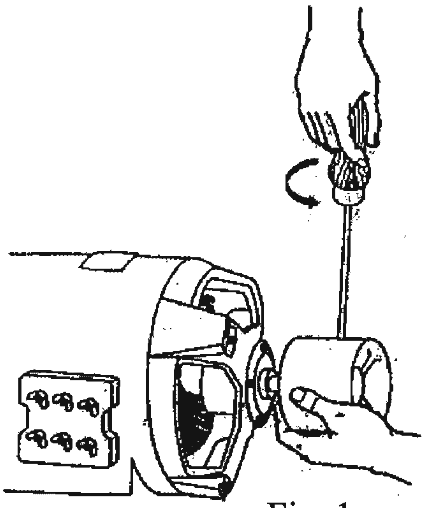

Fig. 1.

Remove the pulley by using a suitable pulley puller as shown in Fig 2.

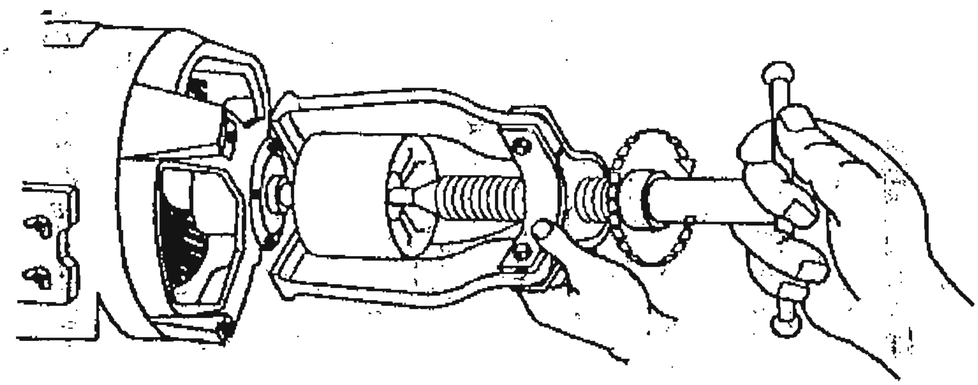

Fig. 2.

To avoid convusion make a single punch mark on one side and a dual punch mark on the other end of the motor.

Remove the grease cup screw.
Make a centre punch alignment mark on the stator and the end shield cover as shown in Fig. 3.

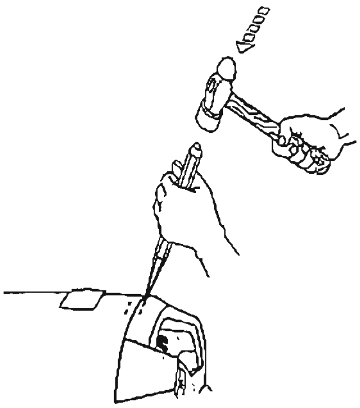

Fig. 3.

Loosen the bolts gradually, switching from side to until they can be removed as shown Fig. 4.

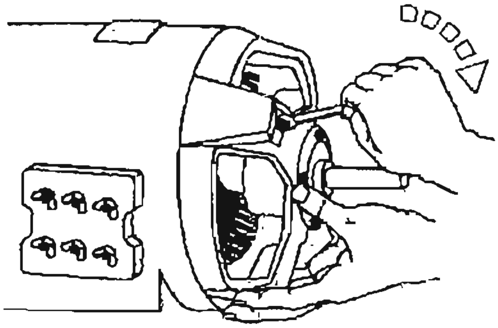

Fig. 4.

Keep the cold chisel tip between the stator and con and gently tap the chisel with a hammer and sepan the stator and the end shield cover as shown in fig. 5.

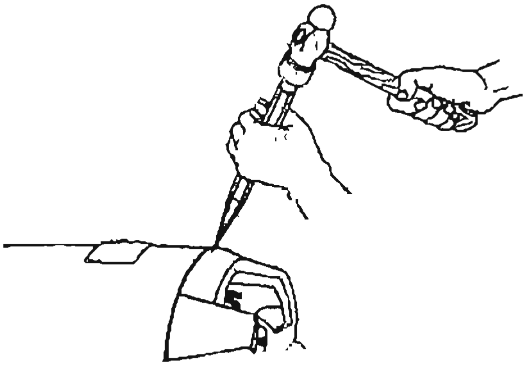

Fig. 5.

Pull off the end shield cover and rotor together, parallel to the motor shaft as shown in Fig. 6.

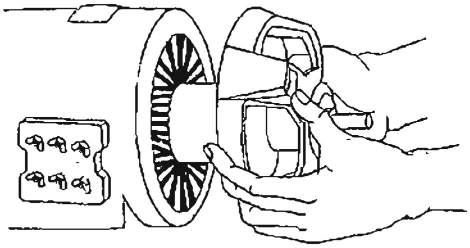

Fig. 6.

Hold the shaft in one hand, rotate the end cover and tap it lightly with a nylon mallet to remove it from the rotor as shown in Fig. 7.

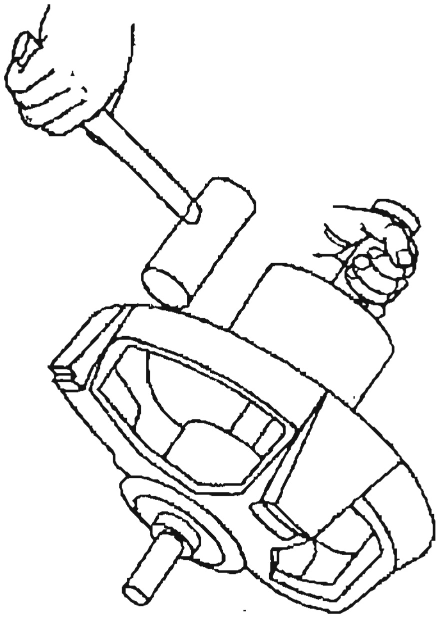

Fig. 7.

Remove the other end shield cover also by gently priming it out

Inspect the rotor for any defect and the bearing for its condition.

If the bearing is worn out replace it with a new one. All fastening devices should be kept in a separate tray. The dismantle parts are shown in Fig. 8.

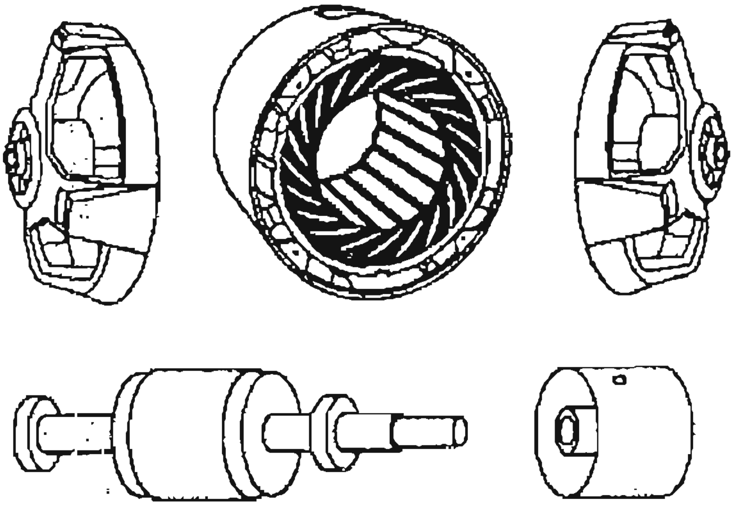

Fig. 8.

Identify whether the winding is of a single layer distributed type.

In a single layer distributed type winding, the number of coils is equal to half the number of slots and the same size of coils are used throughout the winding.

Measure the insulation resistance between the windings and the stator core with a 500V Megger and record it in Table 7

Measure the insulation resistance between the windings with a 500V Megger and record it in Table 8

The above values should not be less than one megohm in any case.

TABLE 7

Insulation Resistance	
Between core and A phase	megoham
Between core and B phase	megoham
Between core and C phase	megoham

TABLE 8

Insulation resistance	
Between A phase and A phase	Megohms
Between A phase and B phase	Megohms
Between A phase and C phase	Megohms

Check the bearing by proper tools

Aplply the quality grease in correct quantity

Assemble the motor in reverse order of dismandle

Measure the air gap by feeler gauge

Test run the motor.

PRACTICAL II

1. STEAM IRON BOX

AIM

1) To dismantle the given faulty steam iron box.
2) To identify the fault and correct it.
3) To Reassemble the iron box and test the iron box.

RELATED INFORMATION

Steam iron iron is commonly used at home. These differ from those ordinary iron box mainly in that they contain a steam chamber and water reservoir. Here the heat from the heating element raises the water temprerature to boiling state, causing steam to be emitted from a set of slots in the sole plate. In this manner, moisture-laden steam comes out from the steam chamber in the iron through the slots in the sole plate.

TOOLS, EQUIPEMENT AND MATERIALS REQUIRED

i) Insulated combination Pliers	:	one
ii) Screw drivers, 20 cm and 10 cm	:	one each
iii) Spanner double ended	:	one set
iv) Test lamp	:	one

Material

i) Steam Iron	:	one

Equipement

i) Multimeter (AVO meter)	:	one

PROCEDURE

A Steam Iron has following parts, which are to be dismantled and re- assembled

i) Sole Plate	ii) Heating element
iii) Water container	iv) Outlet Pipe
v) Regulator	vi) Cover
vii) Insulated handle	

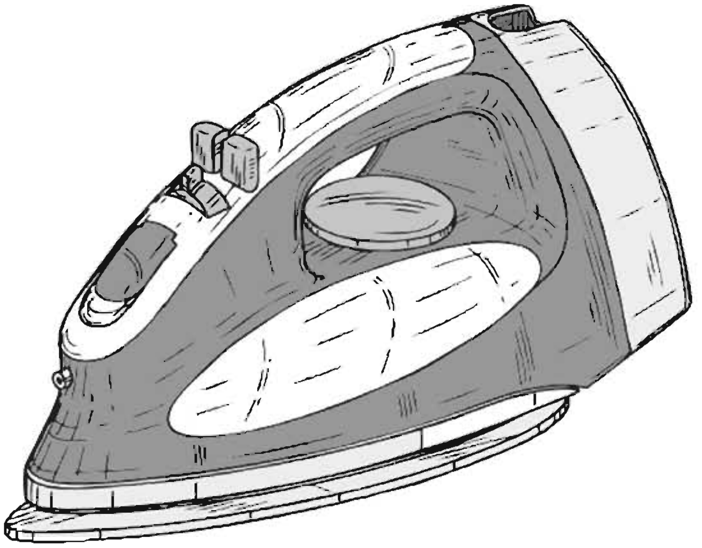

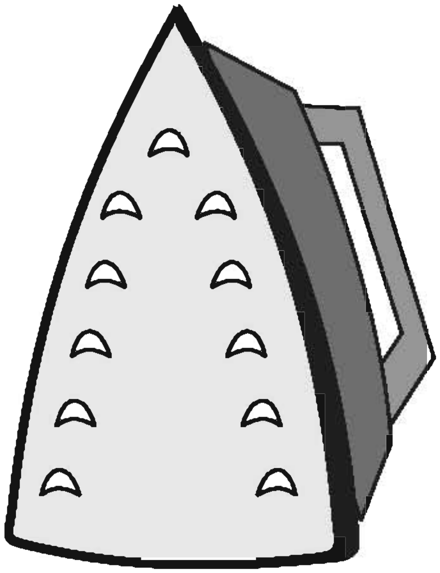

Earth Fault

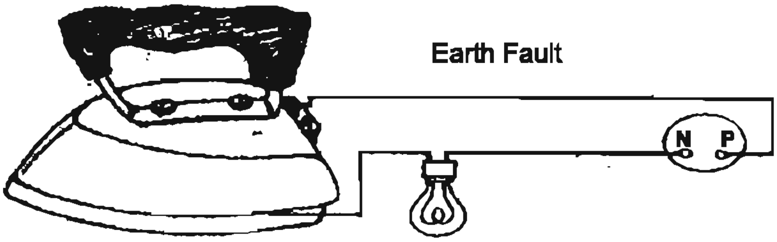

Open and Short Circuit

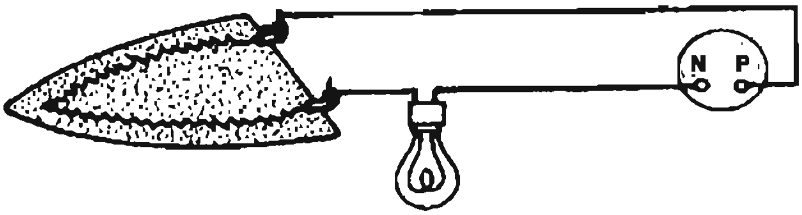

	Open circuit	**Short circuit**	**Earthing**
Test Lamp	Glow / Not Glow	Dim / Bright	Glow / Not Glow
Fault	Occured / Not occured	Occured / Not occured	Occured / Not occured

DISMANTLING

i) Before dismantling ensure that no water in the container.

ii) Loosen the nuts from the bolts of electric iron.

iii) Remove the insulating handle and the cover.

iv) Finally remove asbestos from the sole plate

TESTING

Testing of element is done with the help of test lamp.

Two brass strips are connected to mains through test lamp. The test lamp will indicate the continuity of the heating element by the glow of lamp.

RE-ASSEMBLING

i) If there is any scales formation in the steam outlet, remove it. Use mild Hydrochloric acid solution to remove the scales.

ii) Sole plate studs must be tightened.

iii) Assemble cover with the heating element and then place it on the sole plate.

iv) Pressure plate must be placed on the heaing element and tightened smoothly by nut.

v) Cover plate along with handle may be tightened at the last.

TESTING AFTER RE-ASSEMBLING

Check the continuity of heating element by performing open circuit, short circuit and earth fault tests. If found correct, the elecric iron is fit for use. If there is any kind of fefect dismantle the Iron box and rectify the fault if possible. Otherwise replace the heating element.

PRECAUTIONS

i) While unscrewing or tightening no undue pressure must be applied.

ii) Equal pressure must be given while fitting the pressure plate.

iii) Dismantled parts must be placed in a systematic way and the nut and screws must be secured in bins.

APPLICATION

Electric Iron is widely used in households for ironing cloths. Now-a-days the automatic iron and steam iron have widely come in use. In an automatic iron there is a thermostat which controls the heating of the iron. In steam iron water is used and heated.

2. AUTOMATIC IRON BOX

AIM

1) To dismantle the given faulty automatic iron box.

2) To identify the fault and correct it.

3) Reassembel the iron box and test the iron box.

RELATED INFORMATION

Electric iron is commonly used at home. Its repairs and maintenance will benefit students in their day-to-day work. Students may be told that electric iron works on the principle of heating effect of electricity. When electric current passes through a wire, if gets heated up. If the resistance is low, current is high and heating will also rise accordingly.

TOOLS EQUIPEMENT AND MATERIAL REQUIRED

1.	Insulated cutting plier	-	1
2.	Screw driver 20cm and 10cm	-	1
3.	Spanner set	-	1
4.	Testing lamp	-	1

MATERIAL REQUIRED

Automatic Iron Box.

EQUIPMENT

(i) Multimeter (AVO meter) one

PROCEDURE

An automatic iron box has following parts, which are to be dismantled and re-assembled.

1. Sole plate
2. Heating Element
3. Cast iron plate or pressure plat

4. Thermostat
5. Iron cover
6. Connecting socket with porcelain insulation washer.
7. Cover
8. Insulated handle
9. Washers, bolt, end nuts for lightening the pressure plate and cover.

DISMANTLING

Dismantling of iron box must be done step-by step.

(i) With supply disconnected, loosen the nuts from the bolts of electric iron and renew the thermostat.

(ii) Remove pressure plat after removing its bolts.

(iii)Remove the insulating handle and the cover (iron)

(iv)Finally remove asbestos from the base of sole plate.

TESTING :

Testing the heating element with the test lamp.

Two brass strips are connected to mains through test lamp.

The test lamp will indicate the continuity of the heating element by the glow of the lamp.

RE-ASSEMBLING:

Re-assembling of electric iron is done just in the reverse method to dismantling:

(i) Sole plate must be tightened first.

(ii) Put asbestos sheet on base sole plate.

(ii) Assemble cover with the heating element and then place it on the sole plate.

(iv)Pressure plate must be placed on the heating elementand tightened smoothly by nuts and fix the termostat.

(v) Cover plate along with handle may be tightened at the end.

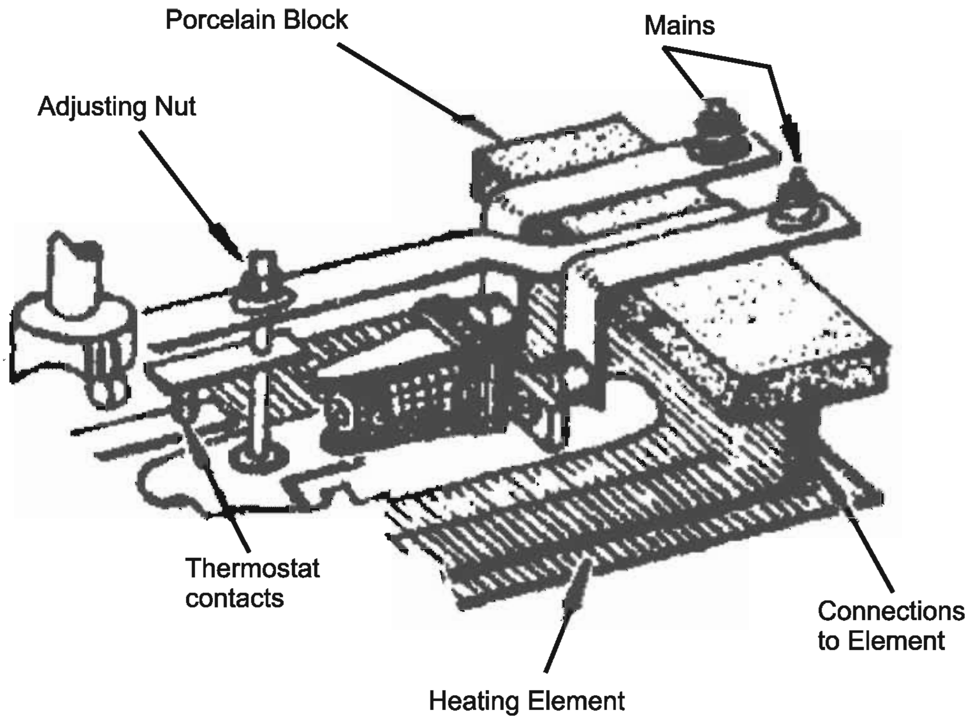
Porcelain Block
Mains
Adjusting Nut
Thermostat
contacts
Connections
to Element
Heating Element

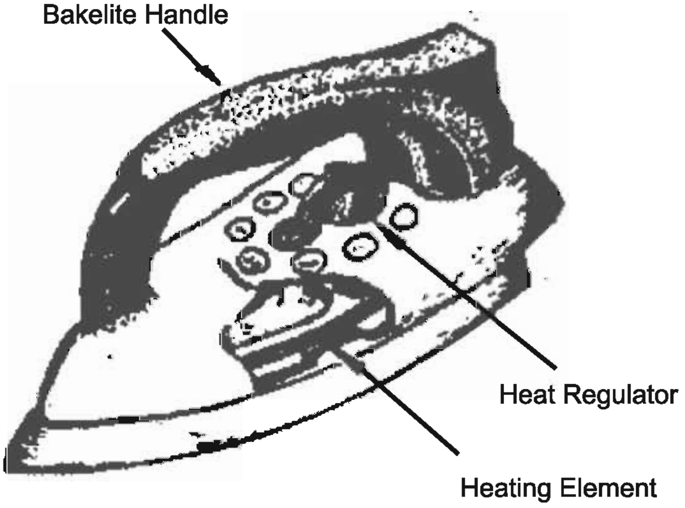
Bakelite Handle
Heat Regulator
Heating Element

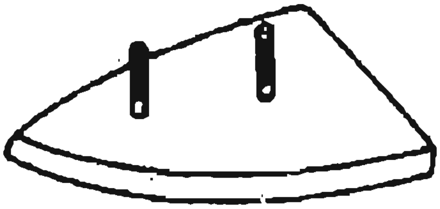

SOLE PLATE WITH BOLTS

PRESSURE PLATE

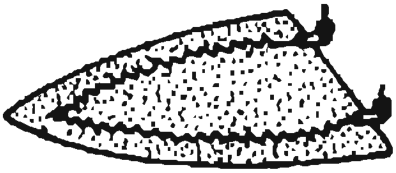

HEATING ELEMENT

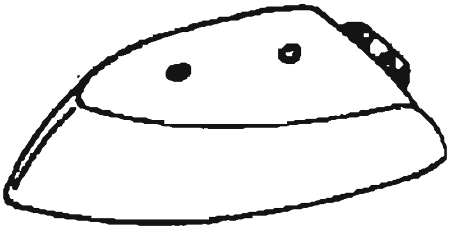

IRON COVER

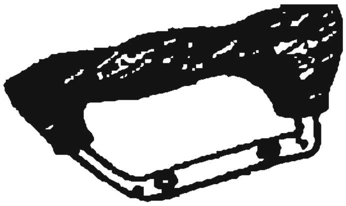

INSULATED HANDLED

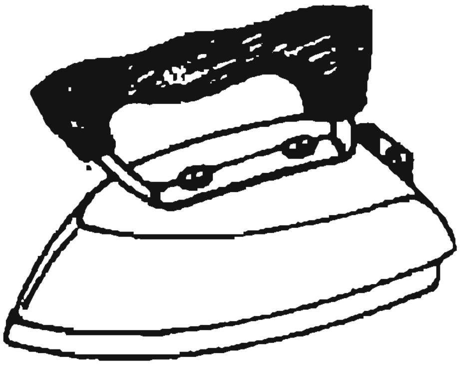

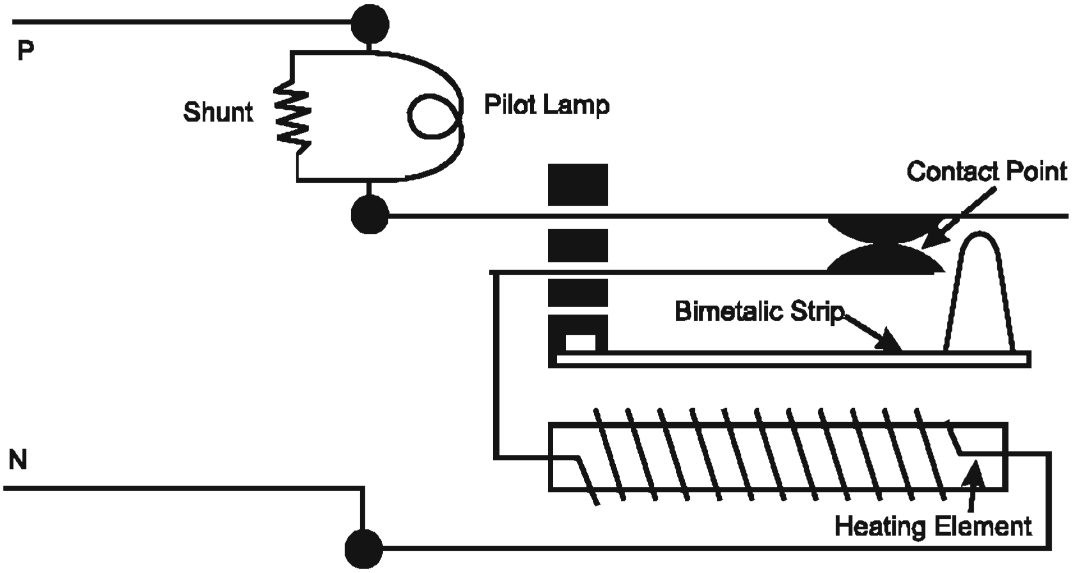

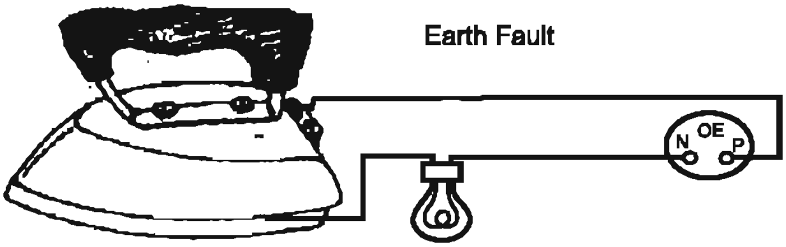

Open and Short Circuit

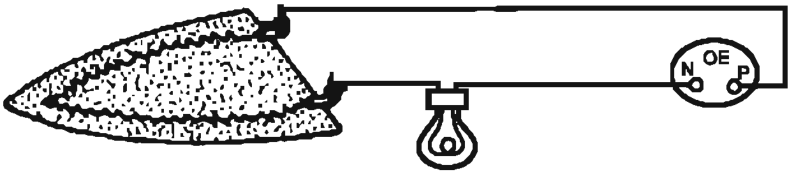

	Open circuit	Short circuit	Earthing
Test Lamp	Glow / Not Glow	Dim / Bright	Glow / Not Glow
Fault	Occured / Not occured	Occured / Not occured	Occured / Not occured

TESTING AFTER RE-ASSEMBLING

Check the continuity of heating element by performing open circuit, short circuit and earth fault tests. If found correct, the elecric iron is fit for use. If there is any kind of fefect dismantle the Iron box and rectify the fault if possible. Otherwise replace the heating element.

PRECAUTION:

(i) While unscrewing or tightening no undue pressure must be applied.

(ii) Equal pressure must be made while fitting the pressure plate.

(iii) Dismantled parts must be placed in a systematic way and the nut and screws must be secured in bins.

APPLICATION

Electric Iron is widely used in household for ironing cloths. Now a days the automatic iron and steam iron have widely come in use. In an automatic iron there is a thermostat which controls the heating of the iron. In stam iron water is used and heated.

3. ELECTRIC STOVE

AIM

1) To dismantle the given faulty electric stove.

2) To identity the fault and correct the fault.

3) Reassemble the electric stove and test the electric stove.

RELATED INFORMATION

Electric stove is used to cook all type of vessels. The heating element is fixed in visible position and there is a grill fixed on it.

TOOLS REQUIRED

(i) Insulated Cutting plier - 1

(ii) Screw driver 20 cm and 10 cm - 1

(iii) Spanner Set - 1.

(iv) Test lamp - 1

MATERIAL REQUIRED

(i) Electric Stove - 1

DISMANTLING

(i) Dismantling the bottom cover

(ii) Dismantling the heating element

(iii) Remove the heating element from porcelin plate.

PROCEDURE

To check for open and short circuit faults.

Step:1

Connect a test lamp in series with th given faulty electric stove terminals, across the supply, as shown in Fig. 3.2

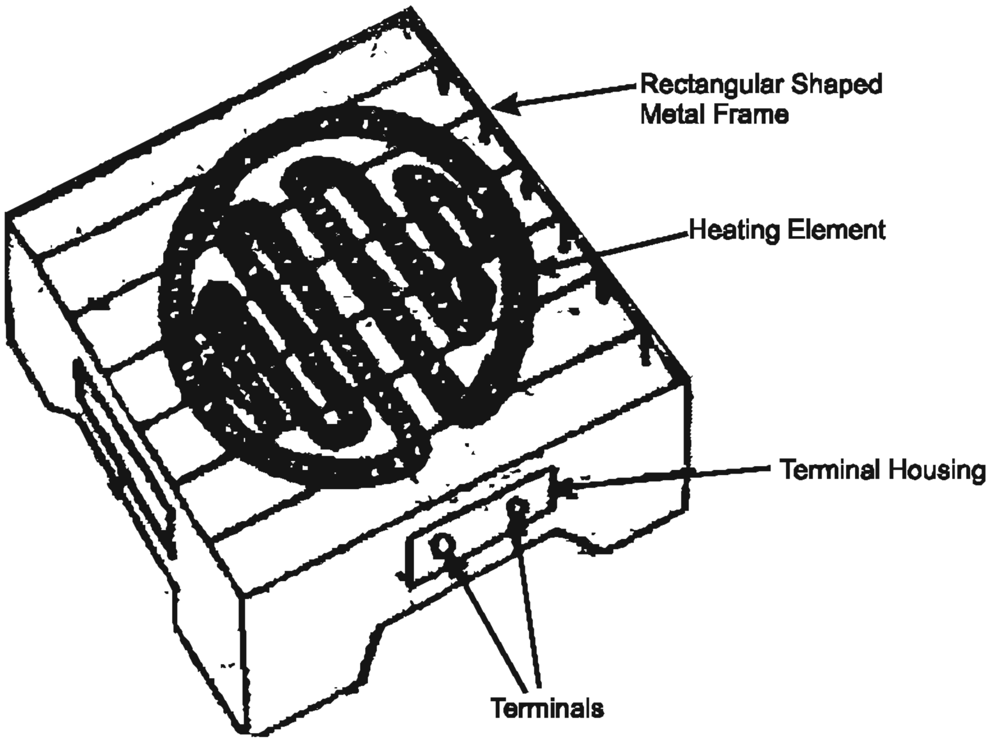

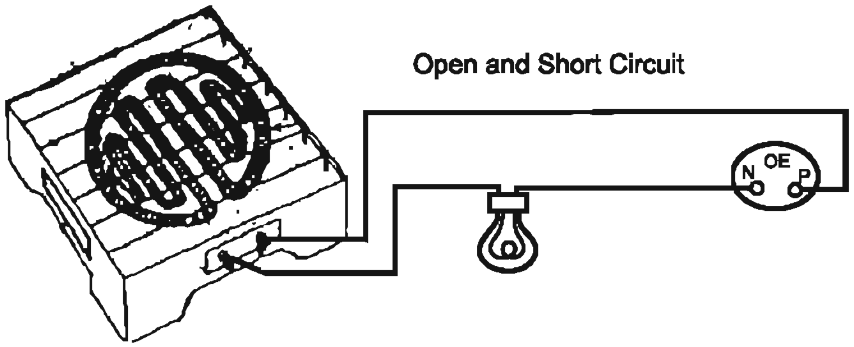

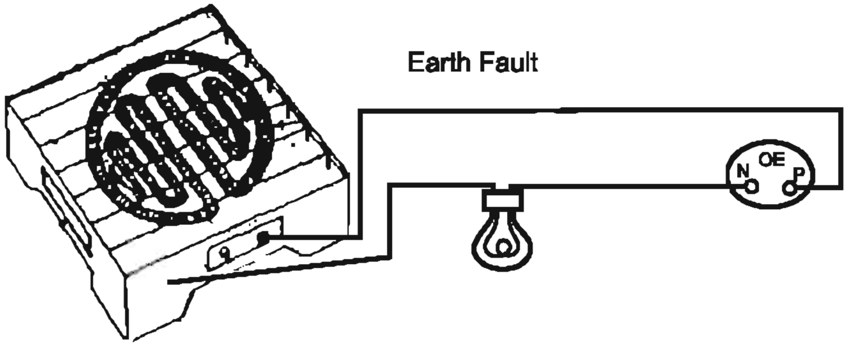

Step: 2

If the test lamp does not glow, then there is an open circuit fault. If the lamp glows brightly, then there is a short circuit fault. Disconnect the test lamp and dismantle the rectangular shaped metal frame. Repair the heating element. Replace with new one, if necessary. Fix the heating element in its place correctly.

Step : 3

Erassemble the rectangular shaped metal frame and repeat step 1, as shown in Fig. 3.3

Step 4

If the lamp glows, then an earth fault has occured. Check whether heating element is in contact with the metal frame. Provide proper insulation between the heating element and the outer metal frame (Like Asbestos, Porcelain etc,) Refix the heating element correctly.

Step 5

Complete the Table 3.1.

	Open circuit	Short circuit	Earthing
Test Lamp	Glow / Not Glow	Dim / Bright	Glow / Not Glow
Fault	Occured / Not occured	Occured / Not occured	Occured / Not occured

PRECAUTION

Made a perfect earth connection.

4 - HOT PLATE

AIM

1) To dismantle the given faulty electric hot plate.

2) To identify the fault and correct the fault.

3) To Reassemmble electric hot plate and test the electrict hot plate.

RELATED INFORMATION

Electric hot plate is widely used for cooking. It is safer than an Electric Stove. it lasts for a longer period than any other cooking appliance. It consists of a nichrome coiled element housed in a metallic frame. Three-pin socket is provided on the frame. The terminals of the element and pins of socket are connected by thick conductor. The whole assembly is covered by a bottom cover plate. A rotary switch has controls namely, low, medium and high temperature. Electric hot plates are usually available in 500, 1000, 1500 watts at 230 volts. It works on the principle of "Heating Effects of Electricity".

TOOLS REQUIRED:

1. Insulated cutting plier - 1
2. Screw driver 20cm and 10cm - 1
3. Spanner set - 1
4. Testing lamp - 1

MATERIAL

(i) Electric hot plate 500W, 1000W, 1500 W one Each.

DISMANTLING

(i) Disconnect the power cord from the mains and remove it from the power plug socket.

(ii) Open the bottom cover plate and unscrew the plate unit from socket and rotory switch.

(iii) Study plate unit by checking the spring like heating element embedded in a groove of the base.

(iv) Plate unit top is made of alloy of cast iron, and placed over the grooved porecelain base. It may not be removed but its construction and position can be carefully observed.

Electric Hot Plate

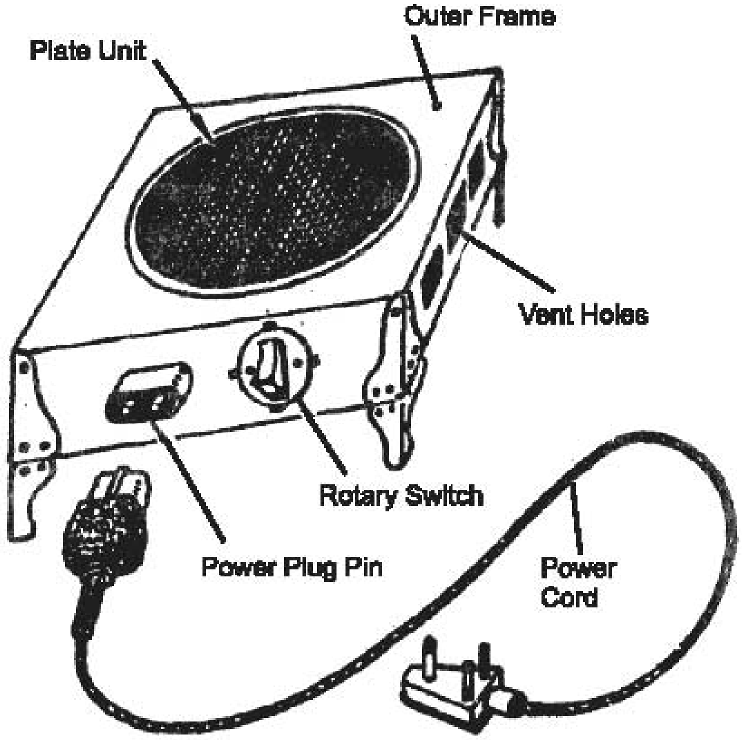

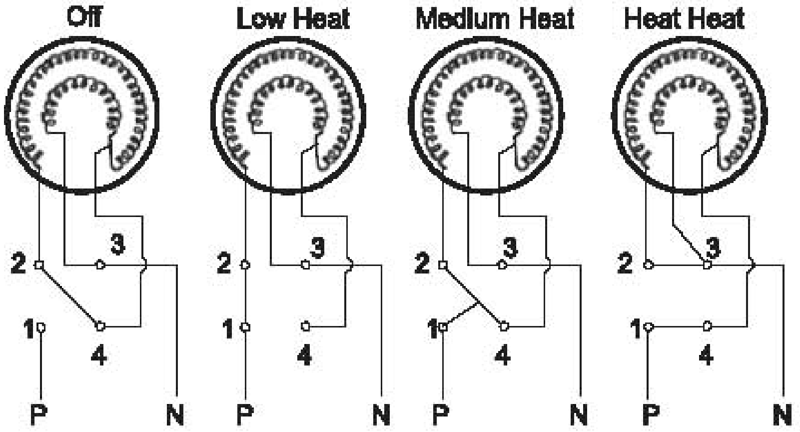

RE-ASSEMBLING

(i) Place the plate unit of the grooves provided and clamp it with the nut and bolt keepting terminals of the element towards the rotary switch.

(ii) Connect the terminals of heating element, one by one.

(iii) Cover with the bottom cover plate by screwing the screws. Connect the two ends of the testing lead to the terminal of plug top of the hot plate. If the lamp does not glow, it means there is an open circuit, i.e. breakage of element inside the plate unit, check continuity and make necessary repair.

For earth and leakage test, connect two ends of testing lamp with power plug pin and body of electric hot plate. If the lamp glows, it indicates earth/leakage fault. Earth/leakage fault may be present in terminal leads, heating elements. and hot plate body.

Open Short Circuit

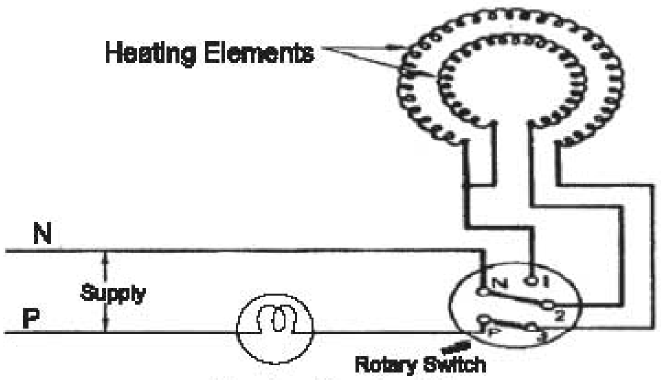

Testing Heating Element

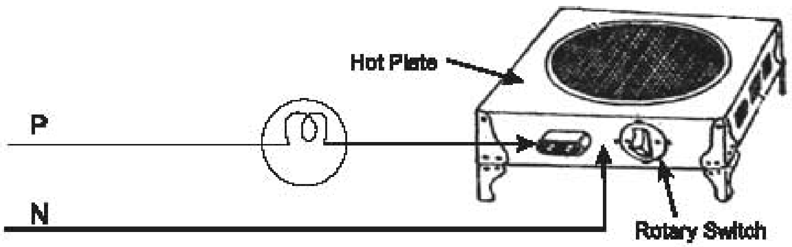

	Open circuit	Short circuit	Earthing
Test Lamp	Glow / Not Glow	Dim / Bright	Glow / Not Glow
Fault	Occured / Not occured	Occured / Not occured	Occured / Not occured

PRECAUTION

Never start dismantling an appliance when it is connected with the mains.

APPLICATION

Electric hot plates are usually used in hospitals and ktichens where there is need to avoid smoke, an dirt. Therefore they are used in sterilization of instruments, for general heating and cooking purpose. It is a costly appliance but has several advantages. It has high, low and medium controls to control the temprature.

5. BREAD TOASTER

AIM:

1) To dismantle the given faulty electric bread toaster.

2) To identify the fault and correct it.

3) To Reassemble the electric bred toaster and test the electric bread Toaster.

RELATED INFORMATION

Toaster is an appliance which works on the principle of heating effects of electricity. Toasters are available from 220 watts to 250 watts. Toasters are used for toasting bread. In a toaster, a coil used as heating element wrapped on two mica sheets in a zig-zag way. Toasters are of two types.

(1) Manual Type Toaster.

(2) Automatic pop-up type toaster.

which works on an automatic time device.

TOOLS REQUIRED

1.	insulated cutting plier	-	1
2.	Screw driver 20cm and 10cm	-	1
3.	Spanner set	-	1
4.	Testing lamp	-	1

MATERIALS REQUIRED

(i) Bread Toaster 200 W 230 V

PROCEDURE

A toaster consists of the following main featues:

(i) Body (two part) cover

(ii) Slot

(iii)Operating knob/lever.

(iv) Timing device.

(v) Base and toaster upright rest.

(vi) Heating element and the wire gauges.

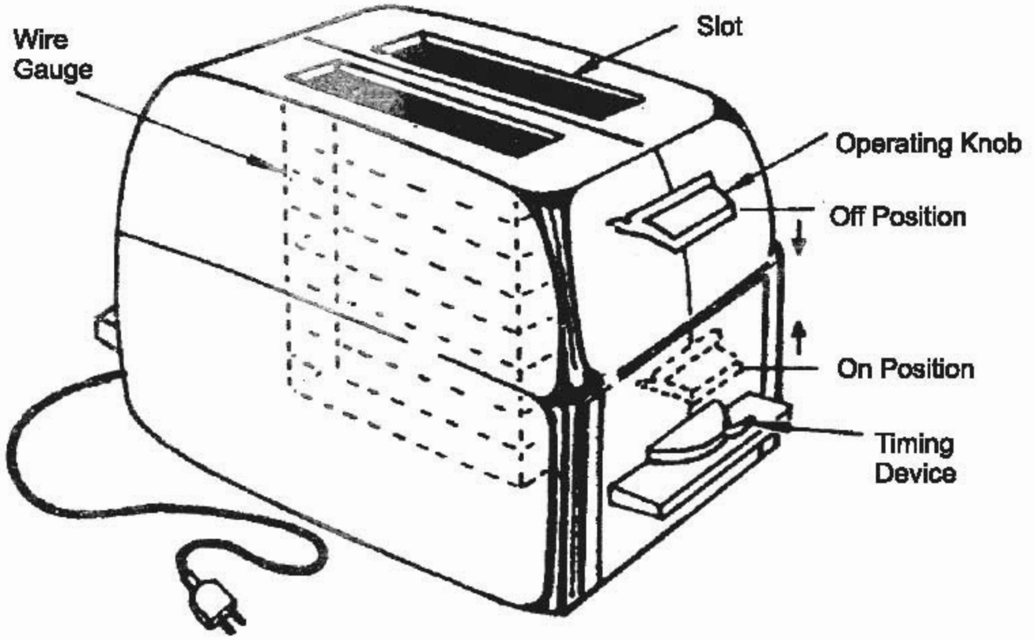
Wire Gauge
Slot
Operating Knob
Off Position
On Position
Timing Device

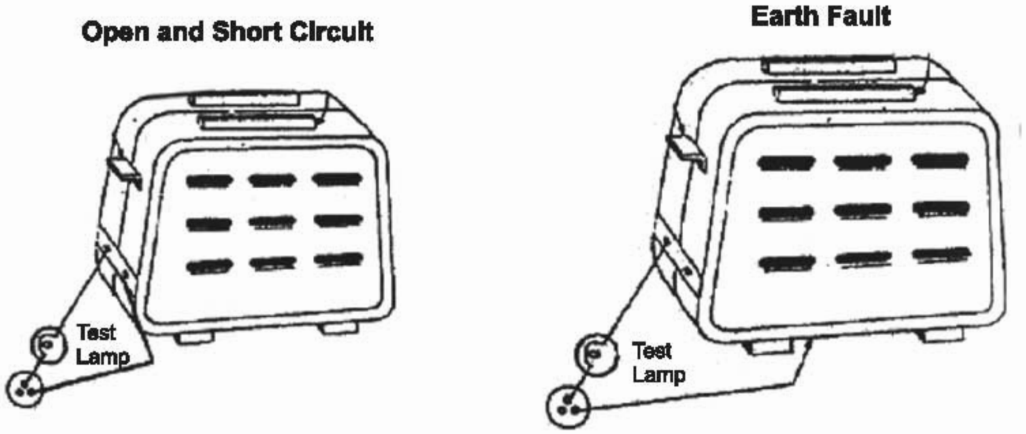
Open and Short Circuit
Earth Fault
Test Lamp
Test Lamp

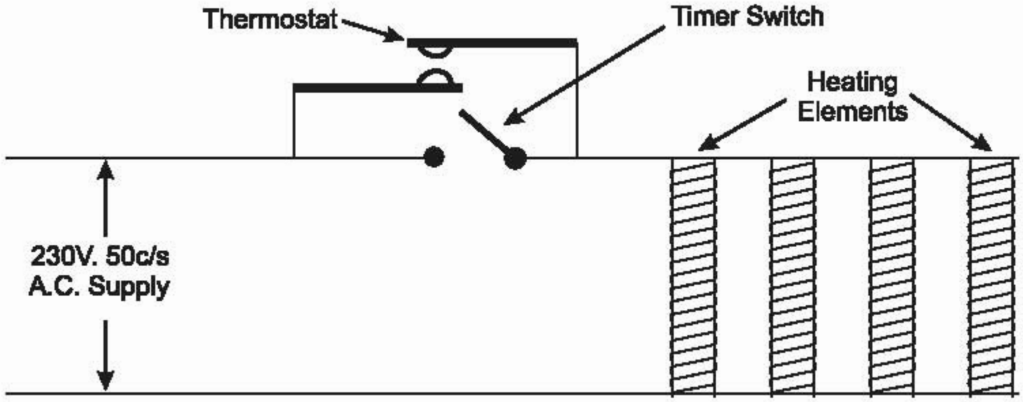
Thermostat
Timer Switch
Heating Elements
230V. 50c/s A.C. Supply

	Open circuit	Short circuit	Earthing
Test Lamp	Glow / Not Glow	Dim / Bright	Glow / Not Glow
Fault	Occured / Not occured	Occured / Not occured	Occured / Not occured

DISMANTLING

(i) Dismantling of electric toaster is done by opening the body covers after disconnecting the appliance from the supply.

(ii) REmove the terminals connecting the two sets of heating elements from the terminals (connector) and check the arrangement of element on mica sheets.

(iii)Release the spring controlling lever, used to pull up or down the toaster. By removing the screws this arrangement can be dismantled, but it should be avoided.

(iv) Time device connection may be studied, and no dismantling is usually done.

RE-ASSEMBLING

(i) Insert the two sets of element outside the wire gauge in the housing and connect the two heating elements with the terminals (connector)

(ii) Closet the two body covers together with screws, nuts and bolts.

(iii)If time-device has been opened, put the adjusting spring in order and check the lever for lifting or lowering the toaster, before closing the body part.

TESTING AND MAINTENANCE

PROCEDURE

Continuity and short circuit

(i) Connect the testing leads to the two ends of the element. If the lamp gives dim light, there is continuity. If the lamp does not glow, it is an open circuit. If the lamp gives full light, there is short circuit.

(ii) In case of open circuit, connect the broken ends. In case of short circuit, separate the touching ends and insulate them with porcelain beads.

6. ELECTRIC KETTLE

AIM:

1) To dismantle the given faulty saucer pan kettle.

2) To identify the fault and correct it.

3) Reassemble the saucer pan kettle and test the saucer pan kettle.

RELATED POINTS

Electric kettle is used for warming water. It is available in two types, viz.

(1) Immersion Type (2) Saucepan Type

In the immersion type the heating element is and inserted inside a coiled tube. The coil is placed in a container and two leads are provided at the side for giving electrical connection. Earth terminal is connected to the metallic container. Leakage of water at the terminals is prevented by providing rubber sealing.

In saucepan type, heating element is similar to that used in electric iron but it is of cicular shape. There are two portions in the kettle. The upper portion is a container of water. The lower portion houses the element. The leads of the heating element is connected to three-pin socket. A three-core cable is used for connecting kettle to the supply.

TOOLS REQUIRED:

1.	Insulated cutting plier	-	1
2.	Screw driver 20cm and 10 cm	-	1 each
3.	Spanner set	-	1 set
4.	Testing lamp	-	1
5.	Connector Screws	-	1

MATERIAL REQUIRED

(i) Sauce Pan Type Kettle-1 (ii) Immersion type kettle-1

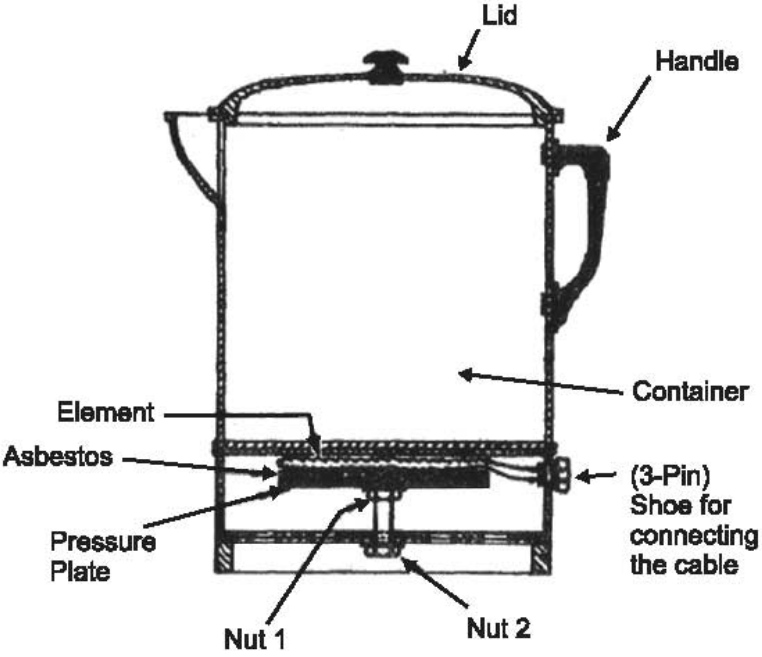

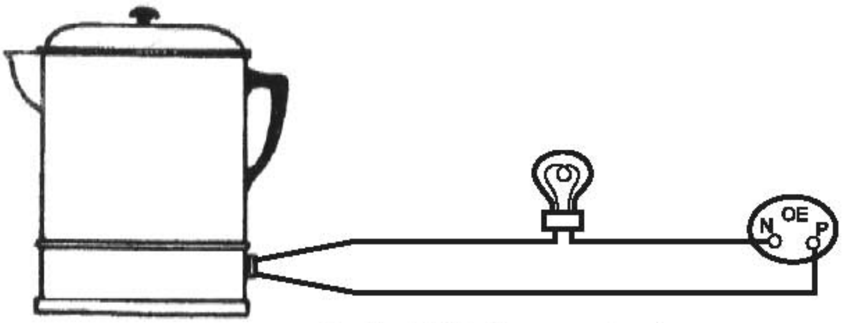

Testing Kettle for open circuit

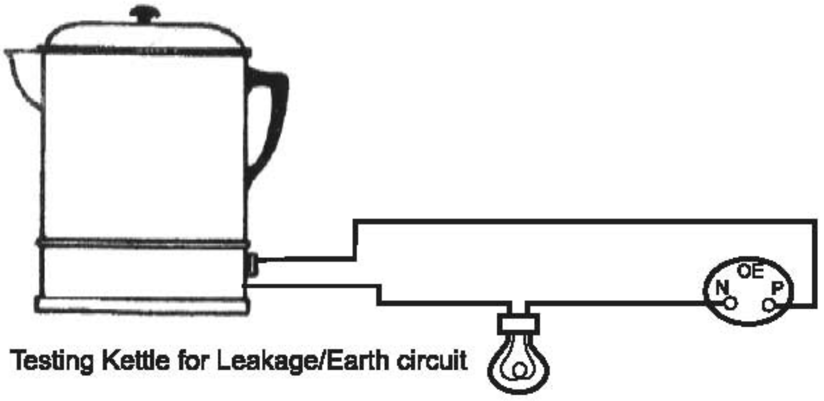

Testing Kettle for Leakage/Earth circuit

	Open circuit	Short circuit	Earthing
Test Lamp	Glow / Not Glow	Dim / Bright	Glow / Not Glow
Fault	Occured / Not occured	Occured / Not occured	Occured / Not occured

PROCEDURE

DISMANTLING (SAUCE PAN TYPE)

(i) Remove the nut provided at the bottom of the kettle. Take out the lower cover after disconnecting the element from the 3 pin socket.

(ii) Remove the nut given on the pressure plate and take out the pressure plate, asbestos sheet and mica insulated element.

(iii) Keep all the parts separately.

RE-ASSEMBLING

(i) Keep the heating element by inverting the kettle.

(ii) Keep the asbestos sheet over the element holding the kettle in the same position.

(iii) Keep the pressure plate over the asbestos sheet and tighten nut No.2

(iv) Keep the lower cover properly over the container and fix the nut No.1. Now the kettle is assembled.

TESTING

Test the kettle with the help of test lamp for (a) open circuit, (b) Continuity (c) earth fault/leakage.

(i) Connect the two leads of the test lamp to the supply.

(ii) Switch on the supply. Touch the test leads to the two terminals of the coil. If the lamp glows it indicates a closed circuit. Therefore the coil is in good condition. If the lamp fails to glow it means the coil is broken (open circuit). Replace the coil.

(iii) Place one test lead on the container and the other on one of the pins of the 3 pin socket. Change the lead on the pin and test it. If the lamp glows in any one position stated above, it means there is leakage or earth fault. Open the kettle and check for the insulation. Provide more insulation, if necessary.

APPLICATION

The skill developed in this lesson may be applied to dismantle, assemble and test similar appliances.

7. ELECTRIC GEYSER

SPECIFIC OBJECTIVE

1) To dismantle the given faulty geyser.

2) To identify the fault and correct it.

3) To Reassemble the geyser and operate the geyser.

RELATED INFORMATION

An electric geyser is an appliance used to heat water by using electric energy. Usually, geysers of the capacity of 5 litres, 10 litres and 50 litres are available. The following are the parts of geyser:

i) Metal water tank

ii) Metal cover

iii) Heating element

In good quality geysers, tanks made of copper with tinned inner side are used. However, steel tanks with nickel plating on the inner side are also used. The outer side of the tank may be painted with red lead.

In order to protect the hot water in the metal tank from heat loss, a metallic cover is provided around the metallic tank. Between the cover and the tank, an 8 cm wide space is left all around the tank. This space is filled with glass wool. Glass wool acts as a heat insulation medium for geyser.

The heating element is fitted a little above the bottom from the side of the tank. Various types and sizes of heating elements are used. However, teh "tube-type" element is in common use. This type of heating element is fitted inside a tube which is full or magnesium oxide. Magnesium oxide acts as an insulator and prevents the elements from touching the walls of the tube. The bottom head of the tube is fitted with a bakelite connector which is fitted with a bakelite connector which is fitted with the connecting pins for the heater element. A detailed diagram for a typical geyser shown in figure. The hot water outlet is arranged is symphonic manner. So that to make hot water available to the initial water level cannot be reduced below level B which ensures that the heating element will always be inside the water.

The thermostat fitted in a geyser controls the temperature of water automatically and, thus, safeguards the whole unit from over heating. As soon as the temperature of the water inside the tank reaches 85^0 the heating elements automatically disconnected. Electric connection is automatically restored as soon as the temperature of water falls.

As the water heating capacity of a geyser increases the electric power consumtion also increases. A typical rating for a geyser is 230/250 volt AC 50 litres, 2000 W.

Equipment and Materials

i) As electrical geyser

ii) Electrician's tool kit.

iii) Test lamp

iv) Megger

v) Multimeter

Procedure

i) Disconnect the geyser from the supply mains.

ii) Drains out all the water from the geyser.

iii) Test for electrical leakage with the help of a megger.

iv) Open the clamps to remove the heater and thermostat from the geyser. Remove the earth connection.

v) Check the continuity of the heater element.

vi) If there is any scale formation around the heater tube, remove it (use hedrochlorc acid solution to remove the scales)

vii) Fit in the heater element and thermostat to its original posistion. Connect the earth wire.

viii) Recheck the geyser assembly against any electrical leakage.

ix) Open the inlet tap until the water tank is filled with water.

x) Close the inlet tap and switch on the electric supply to the unit.

xi) Wait for two to three minutes and then open the inlet tap and outlet tap. Check for the continuous flow of hot / warm water.

xii) Close the water outlet tap and switch off the supply to the geyser.

TABULAR RECORD OF OBSERVATIONS

i) Voltage rating of the geyser.

ii) Water storage capacity.

iii) Electric power rating.

iv) Current drawn by the geyser.

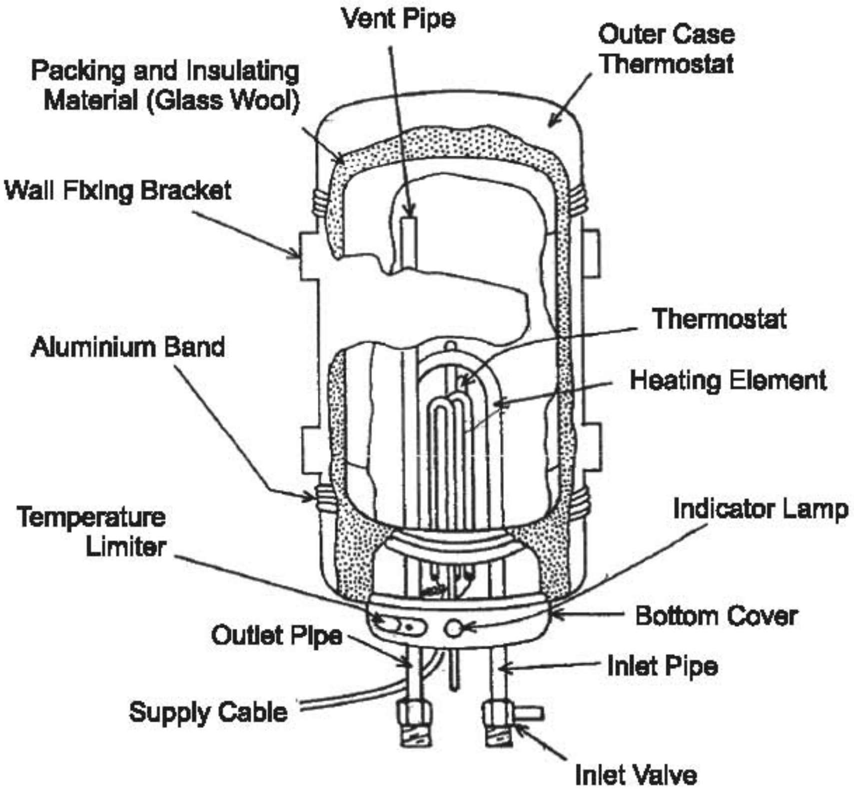

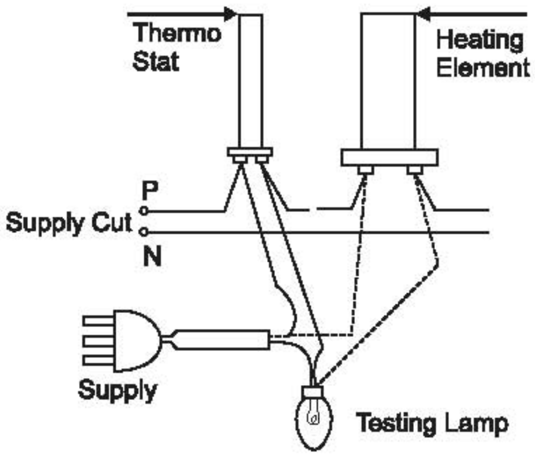

	Open circuit	Short circuit	Earthing
Test Lamp	Glow / Not Glow	Dim / Bright	Glow / Not Glow
Fault	Occured / Not occured	Occured / Not occured	Occured / Not occured

v) Rating of the fuse wire connected in the fuse switch connected to geyser.

vi) Total monthly electric energy (in units) drawn by the geyser, if it remains on for 6 hours a day.

PRECAUTIONS

i) Do not touch the geyser when the power supply is ON.

ii) Check that the body of the geyser is electrically insulated before and after dismantling the geyser.

iii) Check that the geyser tank is filled with water before switching on the electric supply to the geyser.

iv) Disconnect the electric supply from the geyser before leaving the laboratory.

v) When the geyser is not to be used for a long time, the water in the tank should be drained out by unscrewing the drain plug.

8. COFFEE PERCULATOR

AIM

1) To dismantle the given faulty coffee perculator.

2) To identify the fault and correct it.

3) Reassemble the coffee perculator and operate the coffee perculator.

RELATED INFORMATION

Coffee perculator is one of the heating appliance. It is used to prepare coffee in the house. The construction is similar to the kettle. A perculating tube is fixed in side and a coffee basket is fixed on the top of perculating tube. The coffee powder is filled on it. When supply is given to the perculator the hot water raises through the perculating tube. Then the hot water passes through coffee power, coffee extract comes down and is collected in the coffee champer and thus the coffee is prepared.

TOOLS REQUIRED

(i) Insulated Cutting plier-1

(ii) Screw driver 20 cm and 10 cm - 1

(iii)Spanner set - 1

(iv)Test lamp - 1

MATERIAL REQUIRED

(i) Coffee Perculator - 1

PROCEDURE

DISMANTLING

(i) Remove the glass cover.

(ii) Remove the perculating tube with the coffee basket

(iii)Dismantle the pressure plate, Asbestos Sheets, Mica Sheet, heating element.

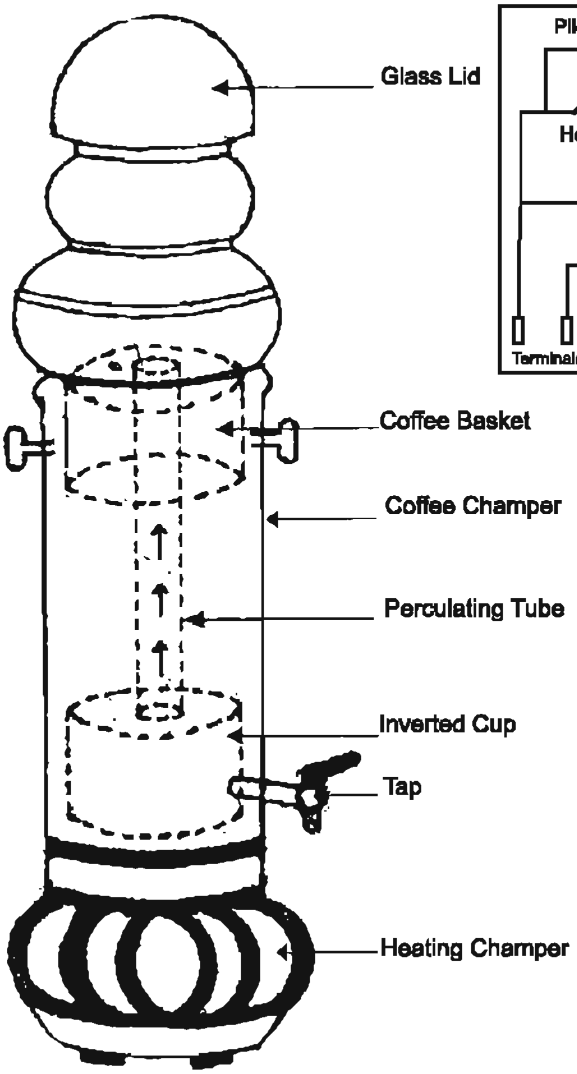

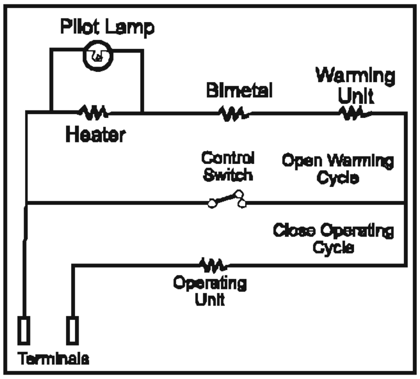

Open and Short Circuit Test

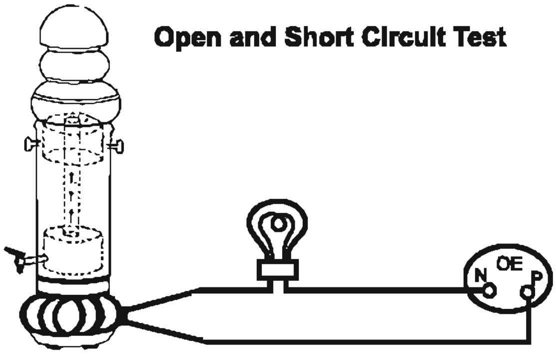

Earth Fault Test

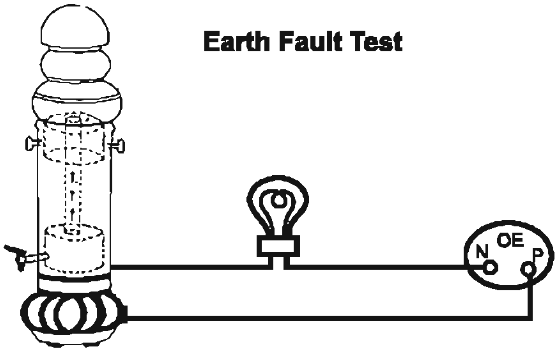

	Open circuit	Short circuit	Earthing
Test Lamp	Glow / Not Glow	Dim / Bright	Glow / Not Glow
Fault	Occured / Not occured	Occured / Not occured	Occured / Not occured

TEST

(i) Connect the test lamp leads to the heating element.

(ii) If the lamp does not glow, open circuit fault has occured.

(iii)If the lamp is dim, the heating element is in good condition.

REASSEMBLE

(i) Fix first the heating element and fix the mica, asbestos sheet, and pressure plat.

(ii) Connect the terminals without short circuit.

(iii)Fix the bottom cover.

(iv)Before operation putting in operation once again conduct the open, short circuit and earth fault tests to confirm that there is no fault in the heating element.

PRECAUTION

Disconnect the supply before dismantling.

9. MIXER

AIM

1) To dismantle the given faulty mixy.

2) To identify the fault and correct it.

3) To reassemble the mixy and operate the mixy.

RELATED INFORMATION

Electric mixer is a boon for housewives. It is a very useful appliance for grinding spices, onions, garlic and ginger etc. Another use of this mixer is in preparation of fruit juice, milk shake, etc.

The speed of the mixer is very high. The mixers are available in small, medium and large sizes. The large size is mostly used for commercial purpose.

The electric mixer can be divided into three parts from construction point of view.

Base: The base portion houses an electric universal motor with a ON/OFF switch or a selector switch if it is a multi-speed motor.

Grinder and Blender The grinder is of two types. The one is for fruit juice, vegetable juice, etc. It is called blender. For grinding dry and hard spices, the blades of the grider are small in size and are made of hard stainless steel.

Bowl:

The material to be ground or mixed is put into the bowl. After the preparation is ready, the bowl along with the grinder is detached from the shaft of the motor. The contents are then poured out.

The bowl and grinding blades are coupled with the help of a nylon coupling (having radial fins over its periphery)

TOOLS REQUIRED

(I) Insulated Cutting plier - 1

(ii) Insulated screw driver 15 CM and 25 CM - 1

(iii)Test lamp - 1

(iv)Bearing Puller - 1.

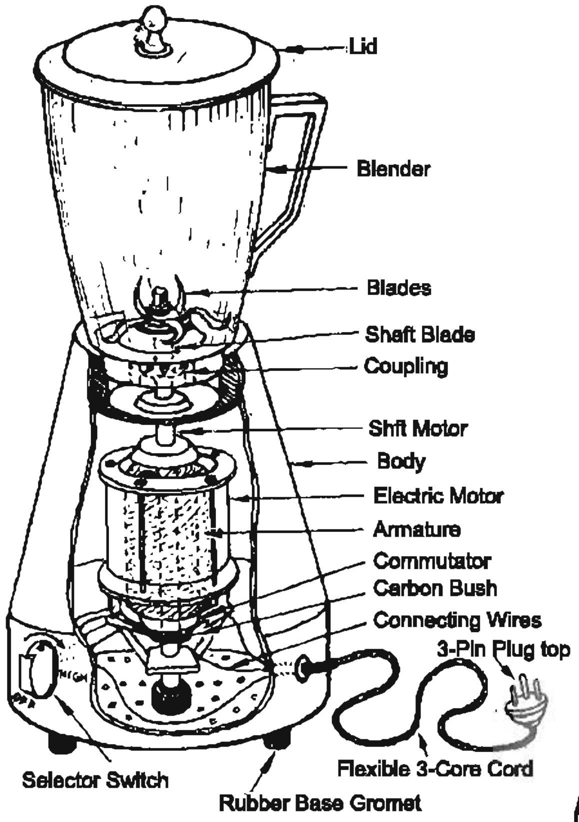

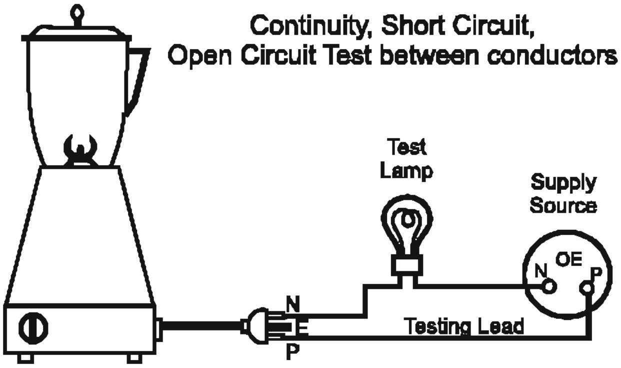

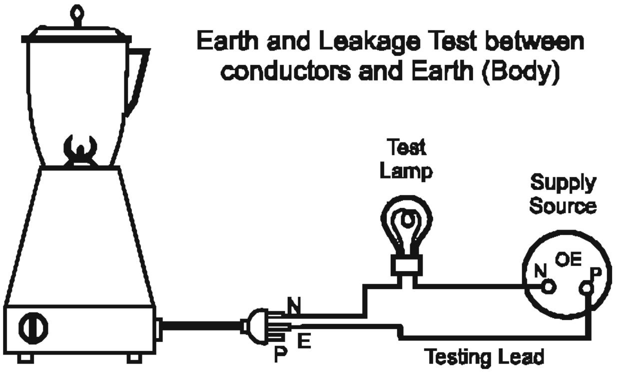

	Open circuit	Short circuit	Earthing
Test Lamp	Glow / Not Glow	Dim / Bright	Glow / Not Glow
Fault	Occured / Not occured	Occured / Not occured	Occured / Not occured

MATERIALS REQUIRED

(i) Mixer - 1

PROCEDURE

(i) Observe fitting of the mixer carefully.

(ii) Remove blender from the mixer.

(iii) Unscrew base cover scews and remove the base cover.

(iv) Remove nylon coupling from the shft.

(v) Unscrew motor mounting screws.

(vi) Remove the motor from the body.

(vii) Dismantle the mixer and check bushes.

(viii) Clean shaft and bushes with kerosene oil.

(ix) Apply mobile oil on bushes and shaft.

(x) Connect test lamp in series with the motor for continuity test, short circuit test and open circuit test.

(xi) Connect a test lamp in series with the motor for earth and leakage test.

(xii) With the mixer switch ON, if the light glows, it indicates that the motor is free from leakage and earth fault.

(xiii) Align carbon bush and its holders properly.

PRECAUTION

(i) The mixer must not be kept "ON" for more than two minutes for any single operation.

(ii) Mixer bowl should be cleaned with water after every use.

(iii)No water should get into motor winding.

10. EGG BEATER

Aim :

To Dismandle, Testing, and Reassembling the faulty egg beater.

Related information:

Egg Beater is a domestic appliances there is a small universal motor uses in egg beater. There is a blade set assembled in the shaft of the motor, when the blade rotate the egg and power food materials are blended well.

Tools required

1) Insulated plier	-	1
2) Screw driver 2cm & 10 cm	-	1
3) Spanner	-	1
4) Series test lamp	-	1

Materials Requred

1) Egg Beater	-	1

Procedure

Parts of egg beater

1) Universel motor
2) Gear Assembly
3) Blade Set

Dismantling

1) Unscrew the top cover,
2) Remove the blade Set
3) Remove the gear assembly

Egg Beater

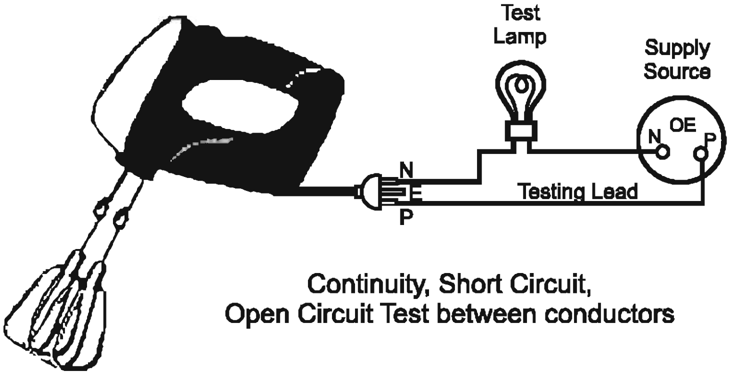

Continuity, Short Circuit,
Open Circuit Test between conductors

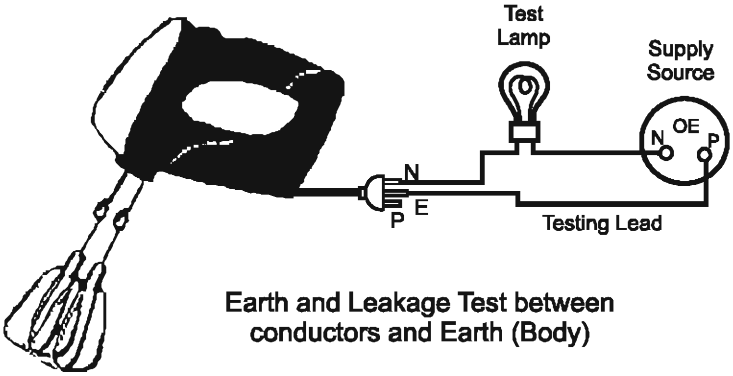

Earth and Leakage Test between
conductors and Earth (Body)

	Open circuit	Short circuit	Earthing
Test Lamp	Glow / Not Glow	Dim / Bright	Glow / Not Glow
Fault	Occured / Not occured	Occured / Not occured	Occured / Not occured

Testing:

Open Circuit fault, short circuit fault, Earth fault are checked with Multi meter. Bearing and gear are checked. Werhe there is any wear.

Reassemble

Universal motor placed in the cover of egg beater and the gear is fitted witht he shaft of the motor and the blade set is assembled with the gear assembly.

Test after the Reassemble

With the help of multimeter open circuit fault , short circuit fault, earth fault are once again checked.

Precaution:

(i) While unscrewning and tighting the screws undue pressure must be applied.

(ii) Dismantled part's must be placed in a systematic way and the screws must be secured in bins

(iii)To prevent the Egg Beater from any major repair maintain it properly.

11. TABLE FAN

AIM

1) To dismantle the given faulty table fan.

2) To identify the fault and correct it

3) Reassemble the table fan and operate the table fan.

RELATED INFORMATION

Generally there are different types of table fan in the market. The size of the table fan measured from its sweep (blade size):

(a) Table fan 22 cms, 30 cms, 35 cms, etc.,

(b) All purpose table fan: The motor of this fan differ from other table fan's motor. It is a shaded pole motor without capacitor.

(c) A table fan having stand is called a pedestal fan.

Table fans are used to circulate air in their vicinity. Table fans (a) and (c) are generally a capacitor start single phase induction motor. The blades of the fans are mounted on the rotating shaft.

Since the table fan is within easy approach of every one, the blades are enclosed with a cage to avoid accident. The cage is mounted on the outer front part of the body.

In a table fan, the motor is at the top of the body and the regulator is at the base. Regulator is used to decrease or increase the speed of the fan. The circulation of air depends upon the speed of the fan. Power consumption of a table fan is approximately 60 watts.

TOOLS REQUIRED

1. Insulated cutting plier - 1.
2. Insulated Screw Driver 15 cm and 25 cm-1
3. Test Lamp - 1.

MATERIALS REQUIRED

(i) Table Fan - 1	(ii) Insulation tape coil - 1
(iii)Lubricant oil or Greece - 1 pocket	(iv) Kerosin oil - 100 ml.
(v) Cloth - 1	(vi) Wooden Plate 2x3x1 1/2

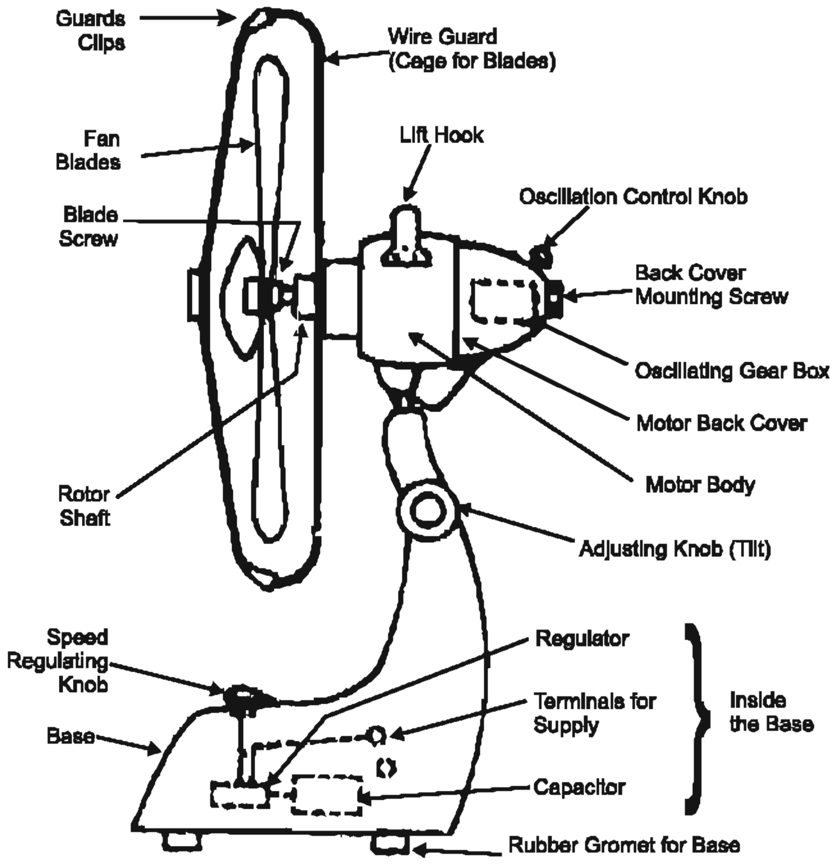

Open and Short Circuit Test

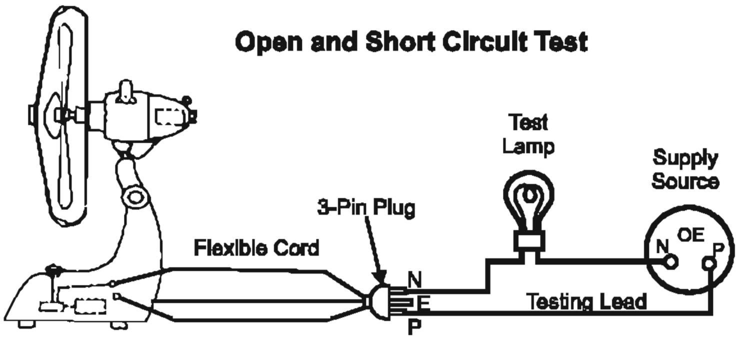

Earth Fault Test

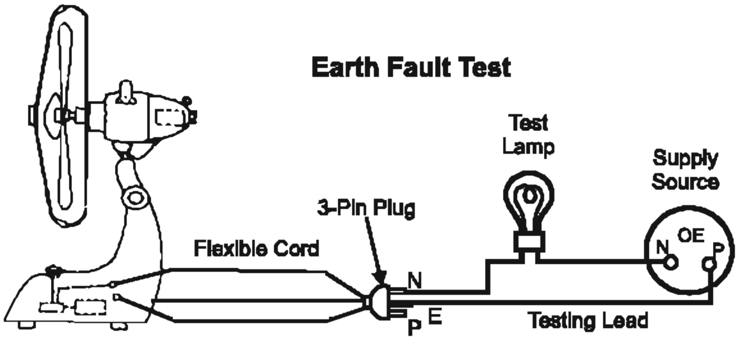

	Open circuit	Short circuit	Earthing
Test Lamp	Glow / Not Glow	Dim / Bright	Glow / Not Glow
Fault	Occured / Not occured	Occured / Not occured	Occured / Not occured

PROCEDURE

(i) Collect required materials

(ii) Place the rubber mat on the floor/working table.

(iii) Observe the fan's fittings.

(iv) Open the clips of the cage.

(v) Unscrew the blades mounting screws and remove the blades from shaft.

(vi) Unscrew the back cover and remove it.

(vii) Take out the gear box by removing the mounting screws of the box. Remove the back cover of the motor by unscrewing the screw. Take out rotor.

(viii) Clean the shaft and bushes with the help of cloth and kerosene oil, Clean the motor winding but do not damage the winding coils.

(ix) Apply mobile oil in the bush pad mountings and bushes. Put grease inside the gear box and clean it.

(x) Fit all the parts simultaneously. Rotate the shaft and check for proper fitting.

(xi) Conduct ear and leakage tests of the fan. Connect the fan to supply and check its working.

PRECAUTIONS

(i) Do not damage coils by hammering or cutting. Do not hammer any part of the fan.

(ii) Before dismantling mark sign on the covers of the fan to maintain alingment for assembling.

12. CEILING FAN

AIM

1) To dismantle the given faulty ceiling fan.

2) To identify the fault and correct it.

3) Reassemble the ceiling fan and operate the ceiling fan.

RELATED INFORMATION

Before handling a ceiling fan the students should know the details of a particular fan. The information is available from a name plate which is fixed on the body fo a fan. Informations on name plate helps us to use the appliance property. In general, most ceiling fans have a capacitor start single phase induction motor with a difference from usual motors that its central portion (rotor/armature) remain sfixed, while the outer portion (stator) rotates. Blades are mounted on the outer portion of the fans. The capacitor is used for giving a starting torque to the fan. Electric fan is mounted over a shaft. When the motor is energised, the outer portion of the fans. The capacitor is used for giving a starting torque to the fan. Electric fan is mounted over a shaft. When the motor is energised, the outer portion makes the blades to rotate and to circulate the surrounding air. The movement of the surrounding air depends upon the speed of the fan. A regulator is connected is series with the fan with different tappings. The speed of a fan can be controlled by a regulator. A fan consists of number of parts. All the parts are fixed together on a shaft. To avoid loose fittings, the parts are locked with bolts, check nuts, split pins and bearing locks.

TOOLS REQUIRED

1. Insulated cutting plier - 1
2. Insulated Screw Driver 15 cm and 25 cm - 1
3. Test Lamp - 1
4. Connector - 1
5. Bearing Puller - 1 No.

MATERIALS REQUIRED

1. Ceiling Fan 200A - 1
2. Insulation tape roll - 1
3. Lubricant oil or Greace - 1 Pocket
4. Kerosene oil - 100 ml
5. Cloth - 1
6. Wooden plank - 2x3x1 1/2

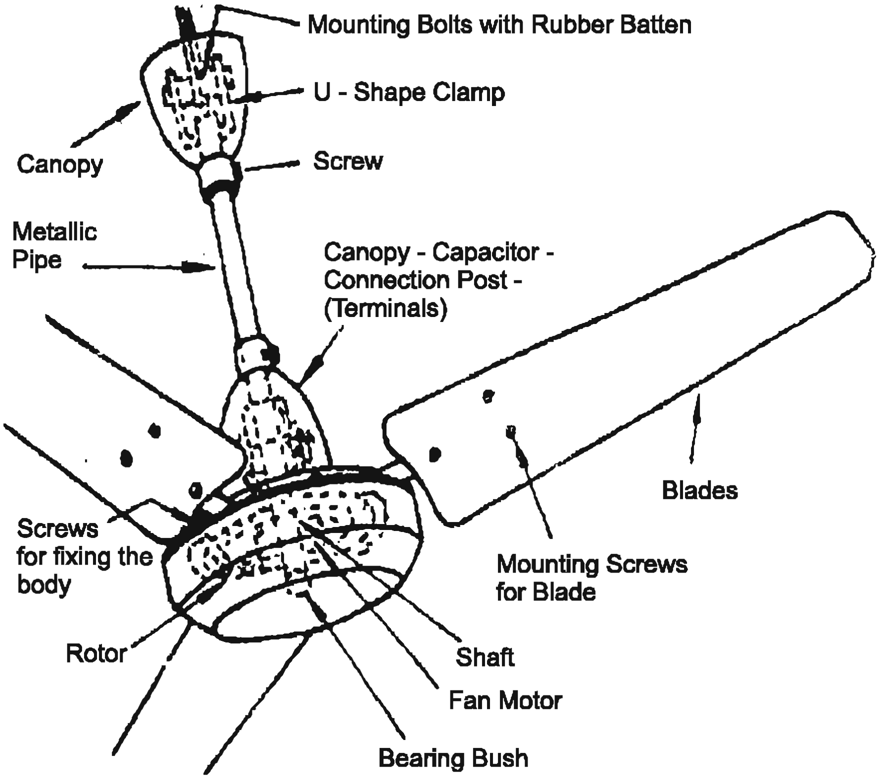

Open and Short Circuit Test

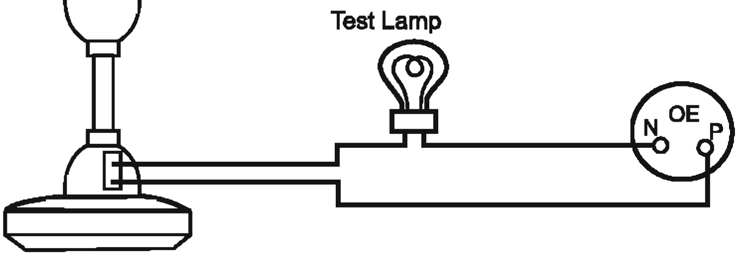

Earth Fault Test

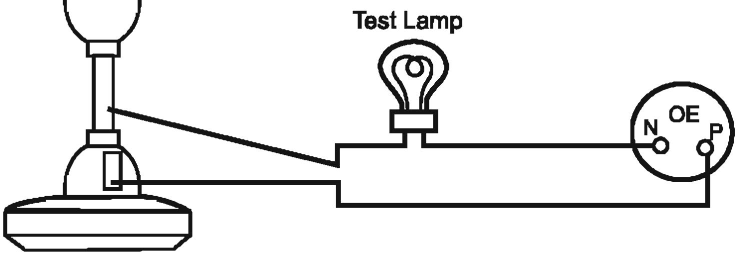

	Open circuit	Short circuit	Earthing
Test Lamp	Glow / Not Glow	Dim / Bright	Glow / Not Glow
Fault	Occured / Not occured	Occured / Not occured	Occured / Not occured

PROCEDURE

(i) Collect tools and materials.

(ii) Hold the fan in one hand and rotate the blades. Check if it gives any sound. Sound means bearing/bush is defective or loose.

(iii) Remove the condenser from its housing.

(iv) Disconnect connecting wires of the fan.

(v) Test with the test lamp between conductors. If it gives dim light, then winding is alright.

(vi) Test in series with the body of the fan. If it gives no light, there is no earth fault and no leakage.

(vii) Test the capacitor in series with series test lamp. As soon as testing leads are connected to the capacitor, the lamp glows and the capacitor gets charged. Remove the test leads from the capacitor short the capacitor's terminals by means of a wire. If any spark develops, it means that the capacitor is alright.

(viii) See the fan carefully and observe its srews, bolts etc.

(ix) Remove the capacitor, disconnect the wires from the terminals.

(x) Remove any lock (split pin, check nut, etc)

(xi) Uncrew the motor screw and blade's scres.

(xii) Remove the blades and the bottom cover of the motor.

(xii) Remove the bearing/bush from the shaft with the help of bearing puller.

(xiv) Remove the armature and top cover of the motor.

(xv) Remove the bearing/bush from the shaft.

(xvi) Clean the bush/bearing with kerosene oil.

(xvii) Fit the bush/bearing into the shaft.

(xvii) Put oil/grease in bush/bearing.

(xiv) Assemble all the parts of the ceiling fan.

(xx) Fix all the screws, locks, nuts, etc. tightly

(xxi) Mount the fan on its respective place and fix the blades.

Make connection of the fan to the supply.

PRECAUTION

(i) While dismantling, assembling and testing a ceiling fan, keep it on a wooden plank or rubber mat.

(ii) Keep all the screws, bolts, locks, nuts, etc. in a box/tray during dismanling.

(iii) Fix all the screws, bolts, locks and nuts properly during assembling.

(iv) Do not lubricate the bush with grease. Always put good grease in ball bearing and moblie oil in the bush.

(v) Handle the fan's blades gently otherwise the blades will be disbalanced and may damage the fan motor, bearings, bush, etc.

13. PUMP

AIM

1) To dismantle the given faulty domestic water pump.

2) To identify the fault and correct it.

3) Reassemble the domestic water pump and operate the domestic water pump.

RELATED INFORMATION

In domestic pump set the capacitor start induction motor are used. Two winding are wound in the stator.

1. Main Winding.
2. Starting Winding

Starting capacitor and centirfugal switch are connected in series with the starting winding.

PROCEDURE:

DISMANTLING:

(I) Separate the axis of motor and pump.

(ii) Dismantle the rotor from the stator.

(iii) Disconnect the connection from the starting winding.

(iv) Test the winding.

(v) Test the capacitor

(vi) Dismantle the pump.

(vii) Dismantle the Impeller.

TESTING

(i) Connect the series test lamp with the main and starting winding and conduct the open, short and earth fault as shown in Fig.15.

(ii) Conduct the earth fault on the winnding by connection one end of the test lamp to the winding terminal and the other end to the body.

(iii) Dismantle the centrifugal swithch and check the spring.

(iv) Conduct the test on the capacitor.

(v) Test the centrifugal pump.

(vi) Test the impeller if it is damaged.

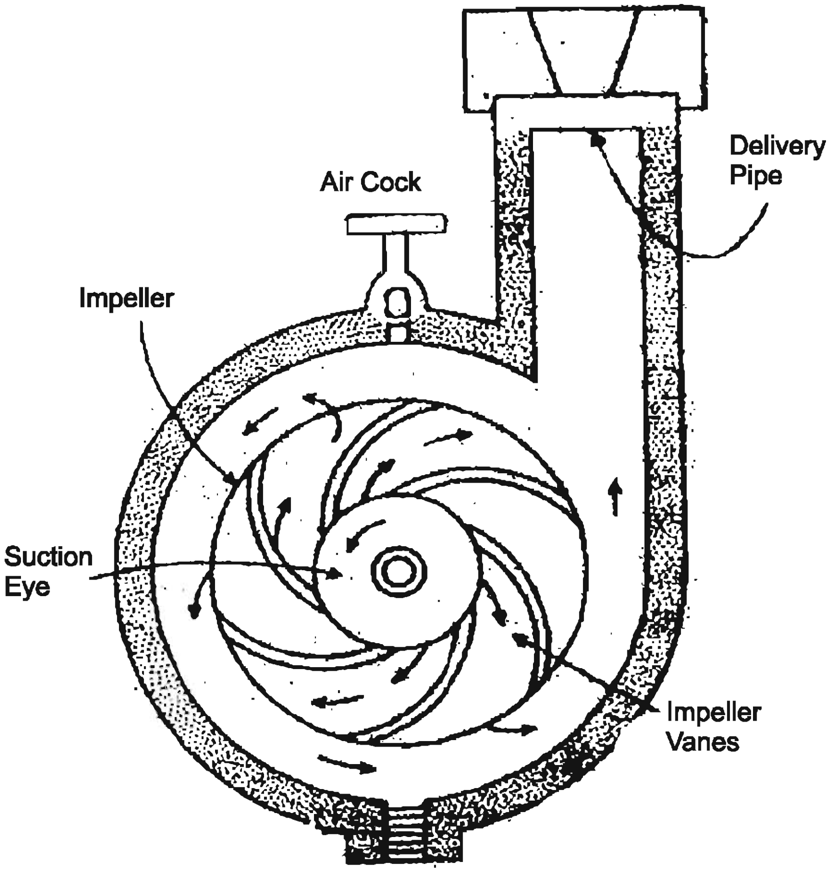

Open and Short Circuit Test at Starting Winding

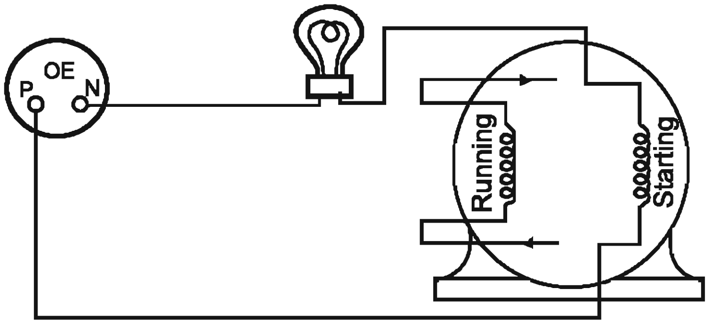

Earth Fault Test

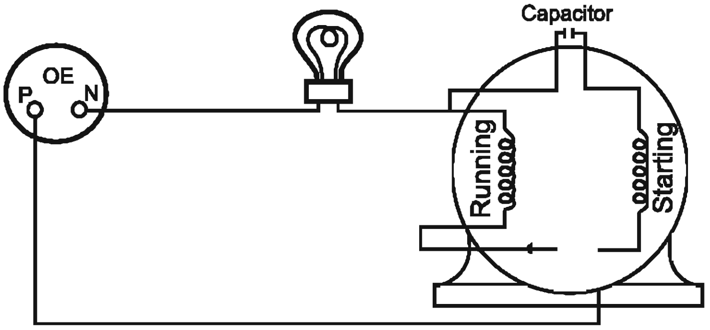

	Open circuit	Short circuit	Earthing
Test Lamp	Glow / Not Glow	Dim / Bright	Glow / Not Glow
Fault	Occured / Not occured	Occured / Not occured	Occured / Not occured

RE-ASSEMBLING:

(i) Fix the rotor inside the stator.

(ii) Connect the centrifugal switch and capacitor in series with the starting winding.

(iii) Connect the starting and main winding in parallel.

(iv) Assemble the impeller inside of the pump casing.

(v) Align the motor axis and pump axis in stright line.

(vi) Assemble the delivery pipe and suction pipe.

(vii) Fix the foot valve immersed atleast 1/2 metre breath the water level.

(viii) Priming the pump.

(ix) Inspect if any leakage from the packing rope.

(x) Conduct a test operation.

PRECAUTION:

(i) Disconnect the supply before dismantling. Confirm alignment is in correct position.

14. ELECTRIC HAIR DRIER

AIM

1) To dismantle the given faulty electric hair drier.

2) To identify the fault and correct it.

3) Reassemble the electric hair drier and operate the electric hair drier.

RELATED INFORMATION

This is a very handy equipment for drying hair. Hair dryer consists of a small fan and a heating element. The air from the fan blows over the heating element and becomes hot. A two-pin plug top is connected at the cord whereas the other end is connected to the hair dryer. The heater element and the fan are housed in an unbreakable bakelite body. The fan motor used in the hair dryer is a shaded pole motor which operates on 220 volts.

TOOLS REQUIRED

1. Insulated cutting plier - 1
2. Insulated Screw Driver 15 cm and 25 cm -1.
3. Test Lamp - 1

MATERIALS REQUIRED

(i) Hair Dryer - 1

(ii) Duster cloth - 1

(iii)Paint brush 15 mm 1

(iv) Spindle oil with can -

(iii)Kerosene oil

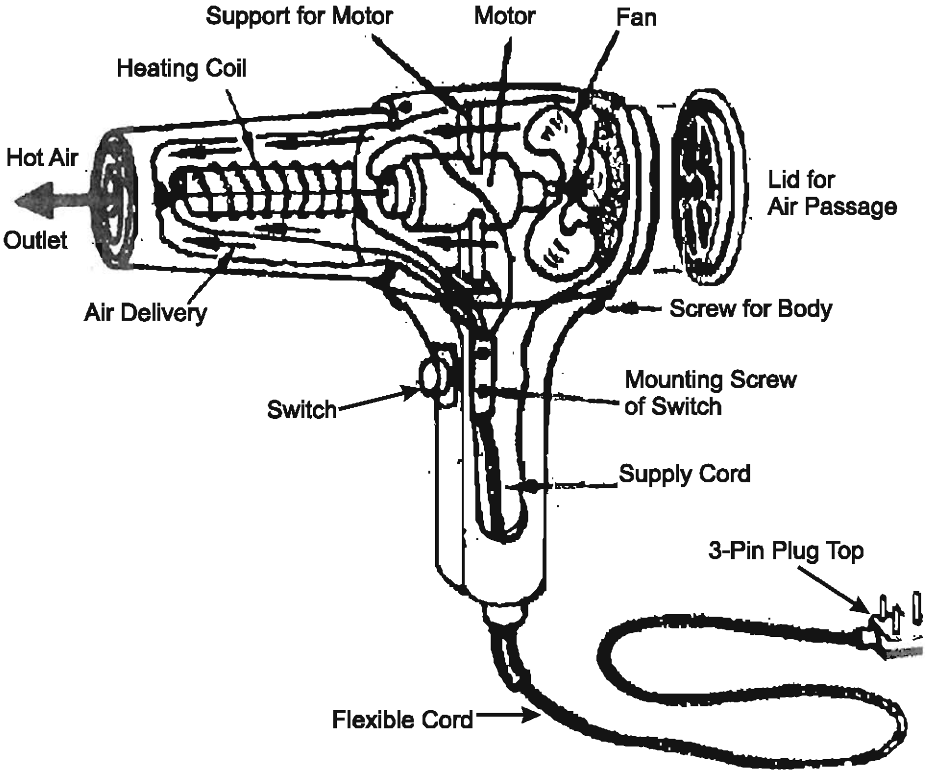

Open and Short Circuit Test

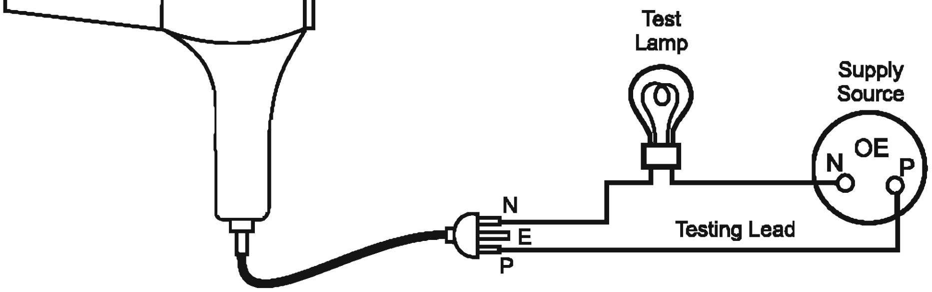

Earth Fault Test

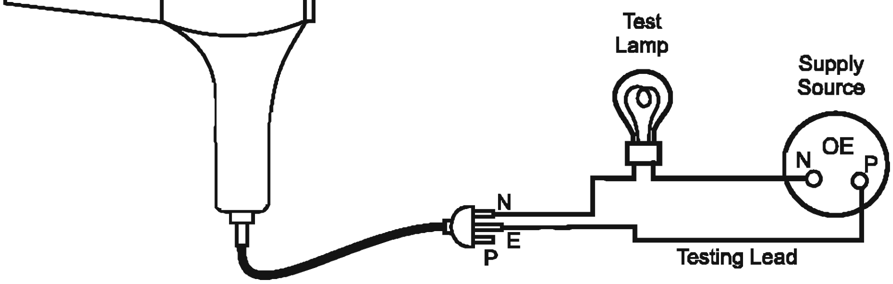

	Open circuit	Short circuit	Earthing
Test Lamp	Glow / Not Glow	Dim / Bright	Glow / Not Glow
Fault	Occured / Not occured	Occured / Not occured	Occured / Not occured

PROCEDURE

(i) Procure material and tools.

(ii) Observe fitting of the dryer.

(iii) Unscrew all screws of the bold & nuts of the body.

(iv) Lift cover of the body.

(v) Check heating element and switch.

(vi) Remove motor from the assembly.

(vii) Check the motor.

(viii) Clean bush and shaft of the motor with kerosene oil.

(ix) Apply oil in the bush pad.

(x) Fit motor and tighten the screws.

(xi) Tighten the top cover of the hair dryer.

(xii) Conduct continuity test, short circuit test and open circuit test of the motor and heating element.

PRECAUTION

Do not put any metallic part or finger into the mouth of the dryer when it is working.

15. VACCUUM CLEANER

Aim:

(i) To dismantle the given faulty vaccum cleaner

(ii) To identify the fault and correct it.

(iii)To Reassemble the vaccum cleaner and test the device.

Related Information :

A vaccum cleaner is a device that uses an air pump to creat a partial vaccum to suck up the dust and dirt, usually from floors. The dirt is collected by either a bag or a cyclone for later disposal.

Working principle:

The working of a Vaccum cleaner strictly depends on the air pressure. When the vaccum cleaner is switched on, the motor starts operating. Since the fan is attached to the motor, the fan starts rotating, forcing air upwards in the process. With the air moving forward, the density of the air before the fan increases and behind the fan decreases. This creats sucion with in the device. This drop in air pressure level with in the cleaner causing air to sucked in.

Tools, equipments and material Required:

i)	Insulated combination plier	:	One
ii)	Screw drivers 20cm and 10cm	:	One each
iii)	Test lamp	:	One

Material

(i) Vaccum cleaner	:	One

Equipment

(i) Multimedia	:	One

VACUUM INNER PARTS

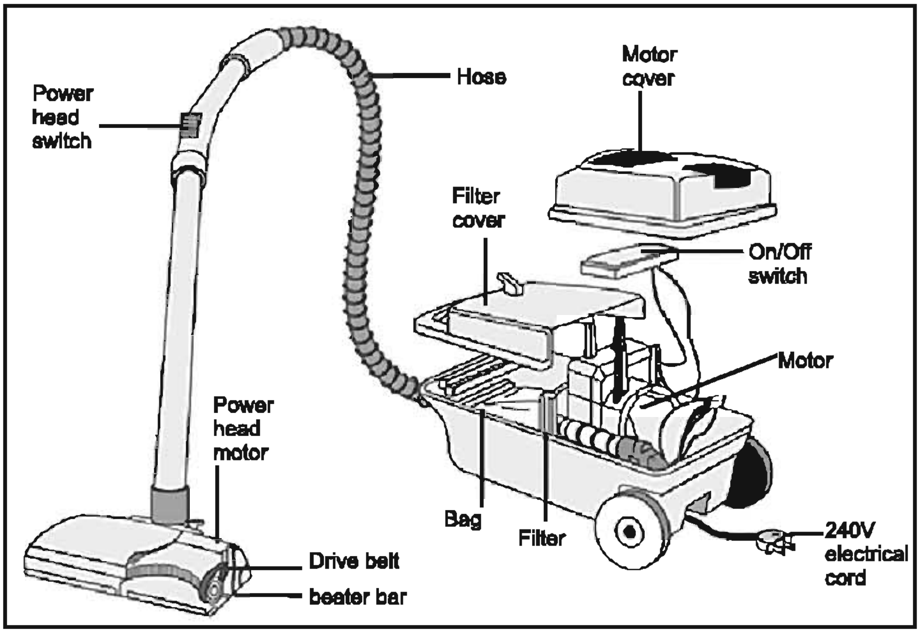

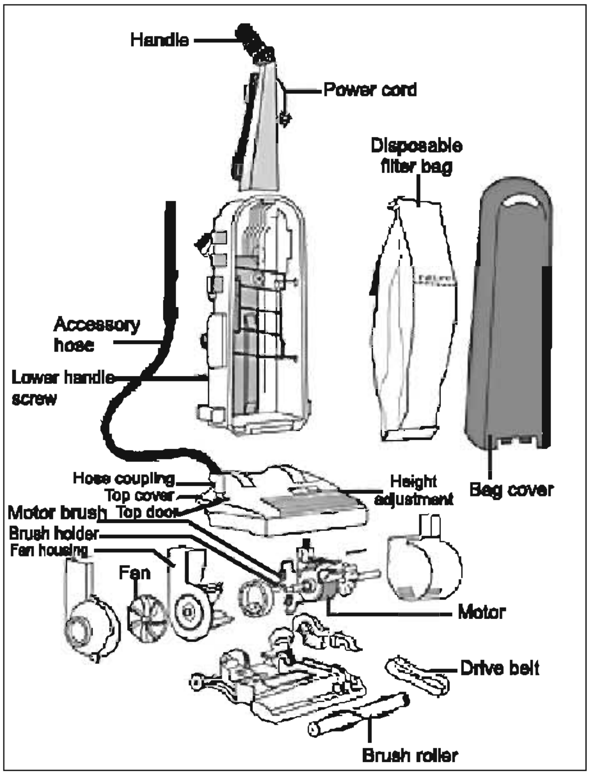

Open and Short Circuit Test

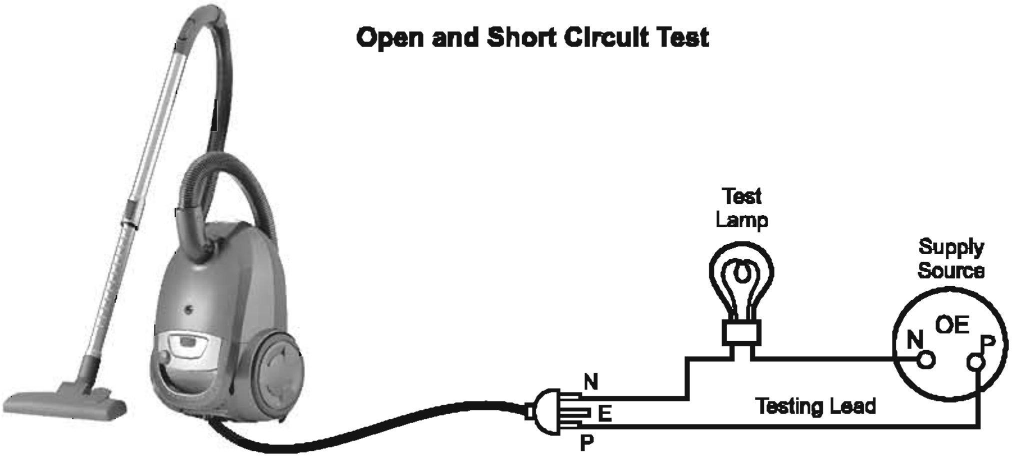

Earth Fault Test

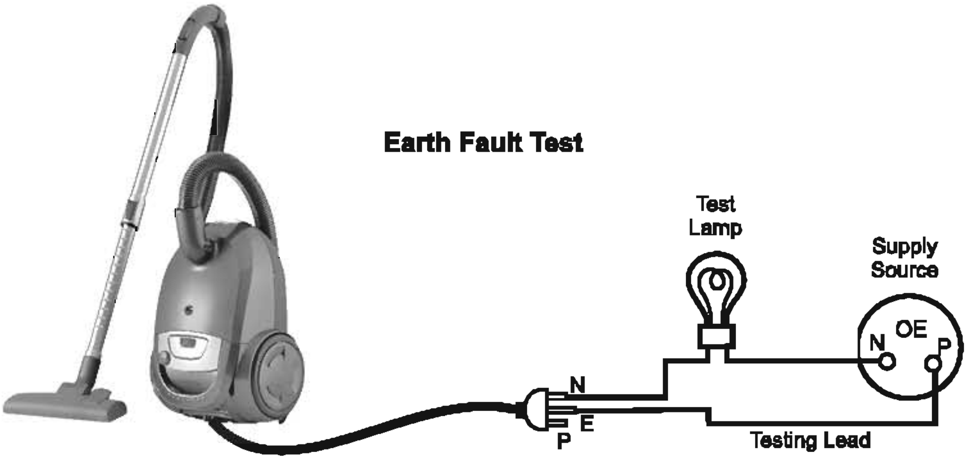

	Open circuit	Short circuit	Earthing
Test Lamp	Glow / Not Glow	Dim / Bright	Glow / Not Glow
Fault	Occured / Not occured	Occured / Not occured	Occured / Not occured

PROCEDURE:

Main parts of a vaccum cleaner:

i) Intake port

ii) Exhaust port

iii) The fan

iv) Electric Motor

v) Filter bag.

vi) Housing

Testing:

After Dismantling, check the suction hose, vaccum filter and vaccum cleaner belt etc.

If any clogging in sudion hose, remove the dogging.

If filter is damaged, replace by new one.

If the fault is in the belt replace the belt by new one. Installing a new belt is ease one. Remove the old belt which connects the agitator brush and drive shaft and install the new one.

Sometimes, any thread or hair could be tangled in the brush. Use a scissor to out them out. Make sure that it is spinning properly with care.

If there is no power supply, check the power supply cord. By continuity test, the fault can be found out. If necessary, install new power supply card.

Another Reason for no supply of power could be due to a burned out motor. In this case remove the motor. Rewind the winding which burned out After testing the motor, If it is correct Refix it. Otherwise replace the motor by new one with same rasing and size.

Dismantling:

1. Turn over the vaccum cleaner.
2. Unscrew the bottom side screws.
3. Raw Remove the bottom plate.
4. Remove the sudision hose.
5. Remove the filter bag.

Re-assembling

1. Fix the filter bag new one.
2. Fix the hose in the sucsion opening. It will give click sound when fixed.
3. Fix the bottom plate in correct position.
4. Fix the Screw on the bottom side screws.
5. Turn the device verificaly in original position.

Testing After Re Assembling

Check the continuity of main cord wire by performer open circuit, short circuit and earth fault test. If found correct switch on the vaccum cleaner.

Check the vaccum cleaner cleans the dirt effectvely.

Precautions:

(i) While unscrewning and tighting the screws undue pressure must be applied.

(ii) Dismantled part's must be placed in a systematic way and the screws must be secured in bins

(iii) To prevent the vaccum cleaner from any major repair maintain it properly.